Slant/Fin®

CARAVAN®

AHRI CERTIFIED® www.ahridirectory.org

HOT WATER/OIL

APPLICATION GUIDE

WET-BASED CAST-IRON MODULAR BOILERS

Guidelines for the design, purchase and installation of Slant/Fin Caravan oil-fired and dual fuel hot water modular boiler systems.

CONTENTS

CODES AND STANDARDS

Oil-fired Caravan installations must comply to local codes or, in the absence of local codes, to the ANSI/NFPA 31, Installation of Oil Burning Equipment, latest edition.

In addition, where required by the authority having jurisdiction, the installation must conform to American Society of Mechanical Engineers Safety Codes for controls and safety devices for automatically fired boilers, No. CSD-1. The installation must also conform to the additional requirements of Slant/Fin Instruction Book publication no. L-40 latest edition.

All electrical wiring is to be done in accordance with the National Electrical Code ANSI/NFPA No. 70-latest edition and all local electrical codes. The unit must be electrically grounded if an external power source is used.

In Canada, the installation must be in accordance with standards CGA B149.1 and B149.2, installation codes for oil burning appliances and equipment and/or local codes. All electrical connections are to be made in accordance with Standard C.S.A. C22.1 Canadian Electrical Code Part 1 and/or local codes.

LOCAL CODE APPROVALS

New York City:	***Pennsylvania:***
New York City Bar No. 51-58	174-BT-S

INTRODUCTION OF FRESH WATER

Introduction of excessive amounts of fresh water into a system can cause scaling and leave deposits in the boiler and the surrounding pipes. This will lead to inefficient boiler operation and breakdown. Fresh water will enter the system as a result of hidden leaks such as may occur in underground piping. Relief valves should be piped to a location that shows visible signs of relief.

Process applications that use fresh water, require the use of heat exchangers. Any process application that results in introduction of fresh water into a boiler can cause scaling with deposits forming in the boiler and surrounding piping. This will damage the boiler. Introduction of fresh water from leaks will cause similar damage. Use of fresh water will void warranty.

In some areas it may be necessary to use a feed water treatment to control the corrosive makeup of the feed water. Check with the local authority, to determine if the feed water will need a conditioning treatment before being supplied to the boiler.

Publication No. CG-10-HWO
Printed in the U.S.A. 816
www.slantfin.com

INTRODUCTION

This Caravan application manual is intended to simplify the selection and application of Slant/Fin modular systems for a variety of space heating and domestic hot water requirements. Where any additional information is required, contract your local wholesaler, Slant/Fin sales representative, or the Slant/Fin factory.

A. Design flexibility - Caravan modular boiler systems are available in virtually any size capacity simply by adding modules.

B. Boiler room design, size and flexibility - since Caravan modules have the burner and controls mounted to the front, they can be installed with minimum clearances as per codes, thus saving a significant amount of floor space.

C. Faster, easier installation - modules are completely factory assembled, including individual jackets to save on-site labor. Optional easy to install supply and return headers with flexible quick connect fittings are available for hot water systems.

D. Safety - each module contains an individual high limit control and a flame safeguard control. ASME relief valve is provided separately for mounting directly on boiler.

E. Fast domestic hot water recovery - Caravan offers an external heat exchanger of the positive circulating type.

Table 1: Oil Caravan ratings hot water models - LDWO Series (100 psi maximum working pressure)

Model No.	No. of Heating Modules	Firing Rate #2 Oil GPH*	Ratings (MBH)		‡ EDR Water (Sq. Ft.)	AHRI Net Ratings (MBH)†	Boiler Horsepower	Water Content (gal.)	Ship Wt.	Recommended Header Size§	Thermal Eff %
			Input	Gross Output							
LDWO-600-2-5	2	4.30	602	500	2900	435	14.9	31.0	1570	2"	82.7
LDWO-750-2-6	2	5.20	728	596	3487	523	17.8	35.6	1790	2"	82.7
LDWO-850-2-7	2	6.00	840	711	4120	618	21.2	45.2	2000	3"	84.6
LDWO-900-3-5	3	6.40	896	750	4347	652	22.4	46.5	2355	3"	82.7
LDWO-1100-3-6	3	7.80	1092	903	5233	785	26.9	53.4	2685	3"	82.7
LDWO-1300-3-7	3	9.00	1260	1066	6180	927	31.8	67.8	3000	3"	84.6
LDWO-1700-4-7	4	12.00	1680	1421	8240	1236	42.4	90.4	4000	3"	84.6
LDWO-2100-5-7	5	15.00	2100	1777	10300	1545	53.0	113.0	5000	3"	84.6
LDWO-2500-6-7	6	18.00	2520	2132	12360	1854	63.7	135.6	6000	3"	84.6
LDWO-2900-7-7	7	21.00	2940	2487	14420	2163	74.3	158.2	7000	4"	84.6
LDWO-3400-8-7	8	24.00	3360	2843	16480	2472	84.9	180.8	8000	4"	84.6

* Light oil, 140,000 Btuh per gallon.
† Net ratings are based on a piping and pick-up allowance of 1.15. Slant/Fin should be consulted before selecting a boiler for installation having unusual piping and pick-up requirements.
‡ Based on 150 Btuh per square foot E.D.R. at 170°F average water temperature.
§ Modules in excess of 8 are piped in parallel to first eight.

For larger sizes, use multiples of the above.

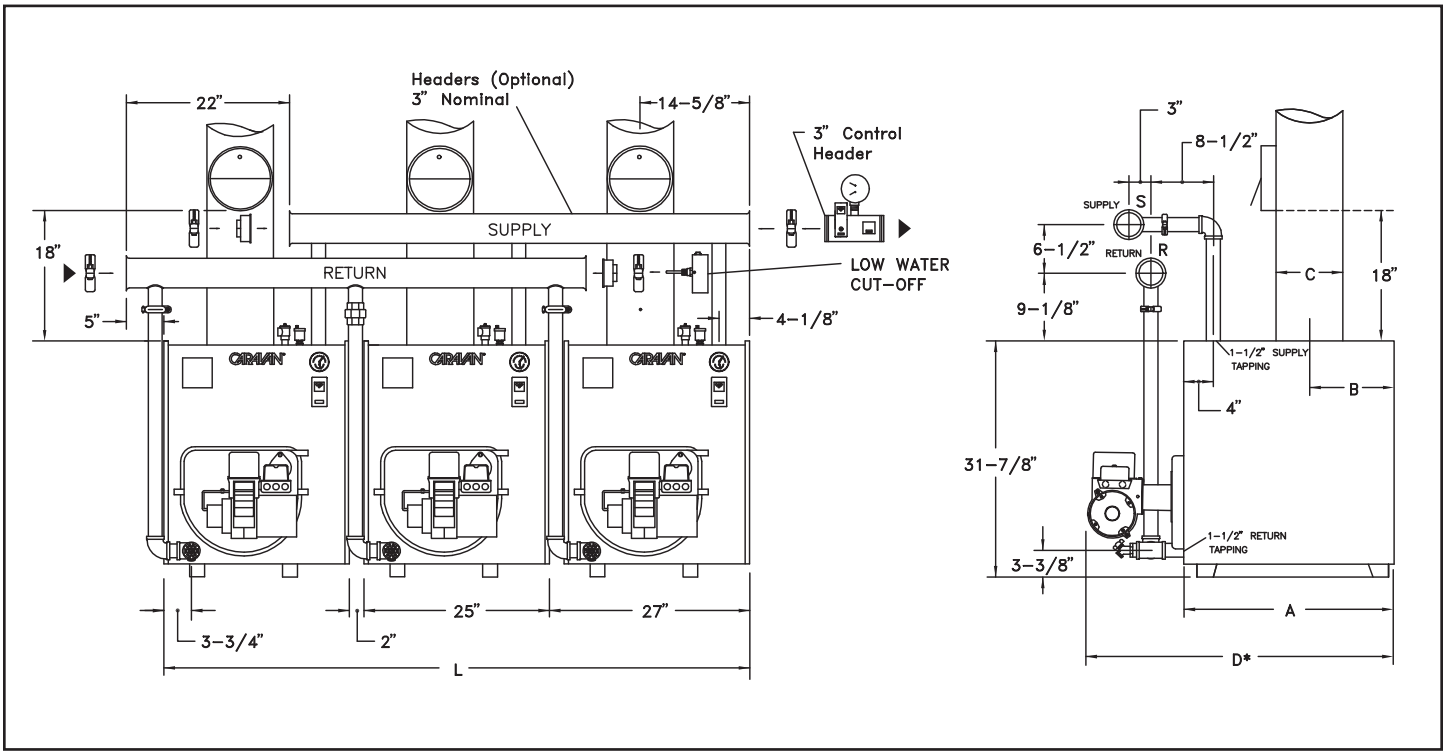

Model No.	A	B	C	D †	L *
LDWO-600-2-5	21⅝	8 7/32	8	34⅜	4'4"
LDWO-750-2-6	25	9 29/32	8	37¾	4'4"
LDWO-850-2-7	28⅜	11 19/32	9	41⅛	4'4"
LDWO-900-3-5	21⅝	8 7/32	8	34⅜	6'7"
LDWO-1100-3-6	25	9 29/32	8	37¾	6'7"
LDWO-1300-3-7	28⅜	11 19/32	9	41⅛	6'7"
LDWO-1700-4-7	28⅜	11 19/32	9	41⅛	8'10"
LDWO-2100-5-7	28⅜	11 19/32	9	41⅛	11'1"
LDWO-2500-6-7	28⅜	11 19/32	9	41⅛	13'4"
LDWO-2900-7-7	28⅜	11 19/32	9	41⅛	15'7"
LDWO-3400-8-7	28⅜	11 19/32	9	41⅛	17'10"

Note: Standard boiler unit prefix is LDWO.

Figure 1. Oil Caravan dimensions and typical piping/hot water models

* 27" spacing between modules.

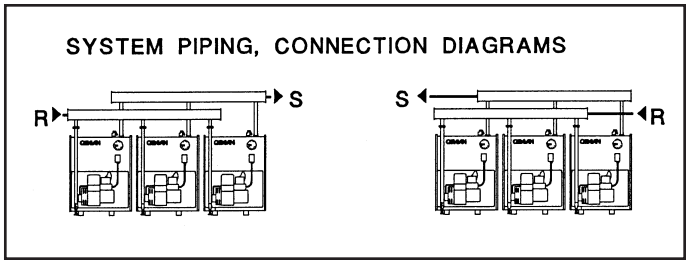

Design Data

Max. ASME Working Pressure: 100 psi
Power Requirements: 120 V/60 HZ,
Amp (s) per module:
For Carlin burners 6.0

RECOMMENDED PIPING AND WATER FLOW

Good system design addresses flow rates through boilers. It is possible to have too little flow and too much flow. Most boiler system designs are based on a 20˚F to 30˚F temperature rise in the boiler when it is firing at full input.

When the flow rate is too high through a module the water flow tends to short circuit from the return tapping to the supply tapping of a module. When flow rate is too high the boiler efficiency may drop and there is excess electrical consumption by the circulator.

Recommended water flows and resultant pressure drops through Caravan modules are as follows. Flow rate is for 20 rise in water temperature and pressure drop is determined at recommended flow rate and includes 1-1/2" pipe that connects module to Slant/Fin header.

7-section modules are used in LDWO-850, LDWO-1300,

Module	Flow Rate/ Module GPM	Pressure Drop/Module PSI
7-section	34	0.30
6-section	30	0.30
5-section	25	0.30

LDWO-1700, LDWO-2100, LDWO-2500, LDWO-2900 and LDWO-3400.

6-section modules are used in LWO-750 and LWO-1100.

5-section modules are used in LWO-600 and LWO-900.

Operating Pressures

System static pressure should be at least 15 PSI cold in modules. When circulators are operating the pressure in the modules should be at least 15 PSI when the water is cold.

Optional Piping Method - Primary/Secondary

When applying oil-fired Caravan boilers to a low temperature water system care should be taken to maintain 130˚F return water temperature inside the Caravan boiler. One way to accomplish this is to design the boiler using primary/secondary piping.

Slant/Fin recommends a minimum of 15˚F system water temperature rise across modules that are firing. If the desired temperature rise is lower than a primary/secondary arrangement should be used, either for the whole modular boiler or using a multiple boiler system as described below. The 15˚F minimum temperature rise can be maintained in the modules without affecting the system water.

1. Primary/secondary piping may be applied to a Caravan modular boiler system as demonstrated on Figure 4. In this type of application the modular boiler is contained within the primary loop. However, this is still a modular boiler, if it has no valves between the modules.
2. Primary/secondary piping may also be used on each individual "module", please see figure 5. In this arrangement the Caravan is no longer a "modular" boiler, it is now a "multiple" boiler system. In a multiple boiler system each module is actually a standalone boiler and each boiler should be equipped with a manual reset hi limit and low water cutoff. Certain local codes also require a minimum distance between each boiler.

Please remember to always follow code requirements applicable to the building that the boilers are being installed in.

Most Caravan systems are applied as a modular boiler, not as a multiple boiler. A modular boiler system is efficient, easy to maintain and very dependable. When a multiple boiler is used there are additional circulators, manual reset hi limits and low water cut-offs to install and maintain.

Some people believe a multiple boiler system is more efficient because water flows through only those units that are firing. They may think water flowing through modules not firing leads to energy loss in those modules. However, we must remember a boiler heat exchanger is designed to absorb heat from high temperature combustion and transfer it to low temperature water (certainly below 250˚F water). Boilers do not make good "convectors" and very little heat is passed through the venting of a module not firing. Oil-fired modules experience very low airflow through the heat exchanger when not firing.

In most applications we recommend a step or stage controller, that modulates system water temperature, be used on a Caravan system. These controls ensure the number of modules firing equals the actual demand for heat. Slant/Fin's step controllers are the SC-3 and SC-9 model controls. Please see the Control section of this manual for more information on these controls.

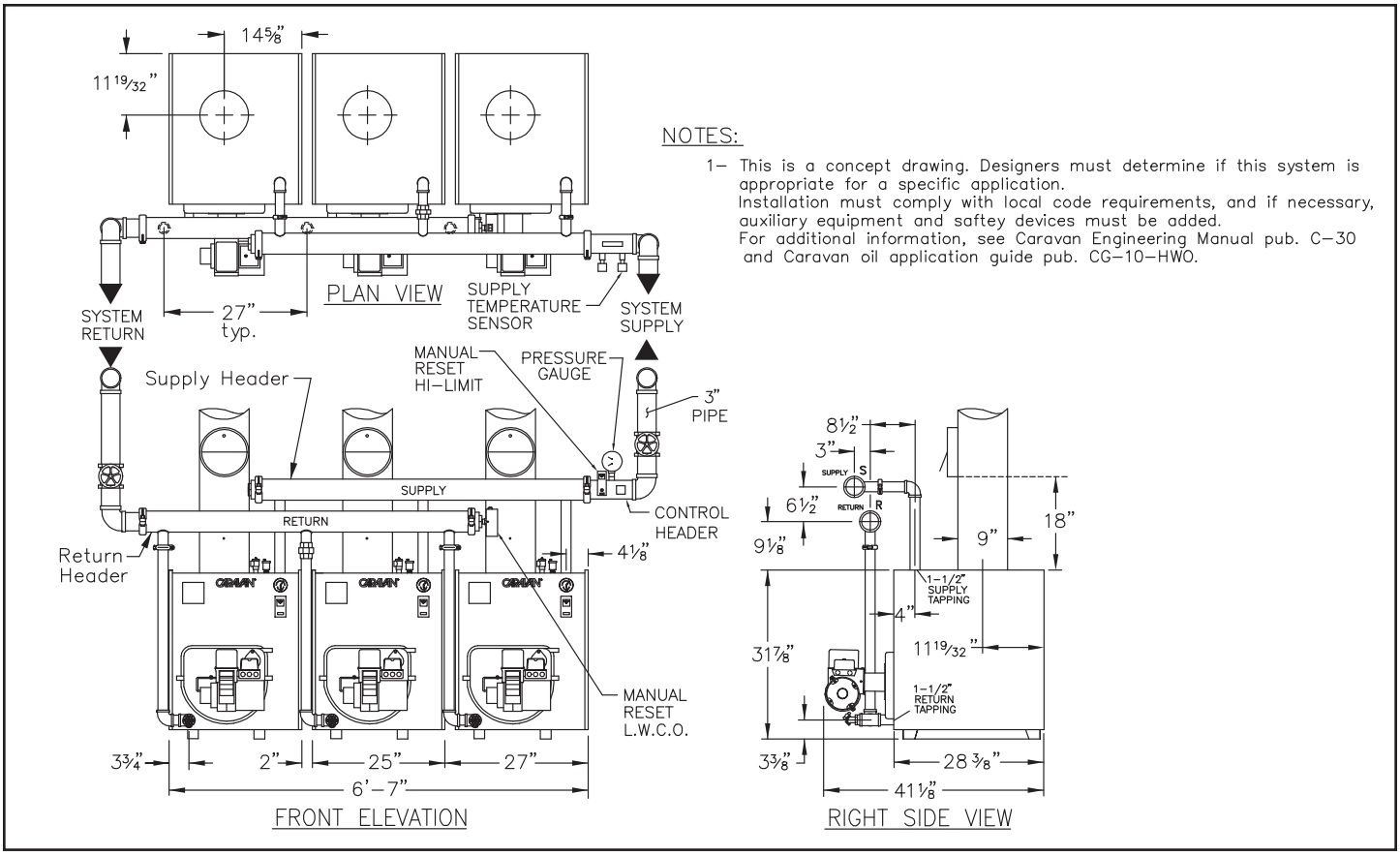

Figure 2. Typical space heat piping – For primary circulation only.

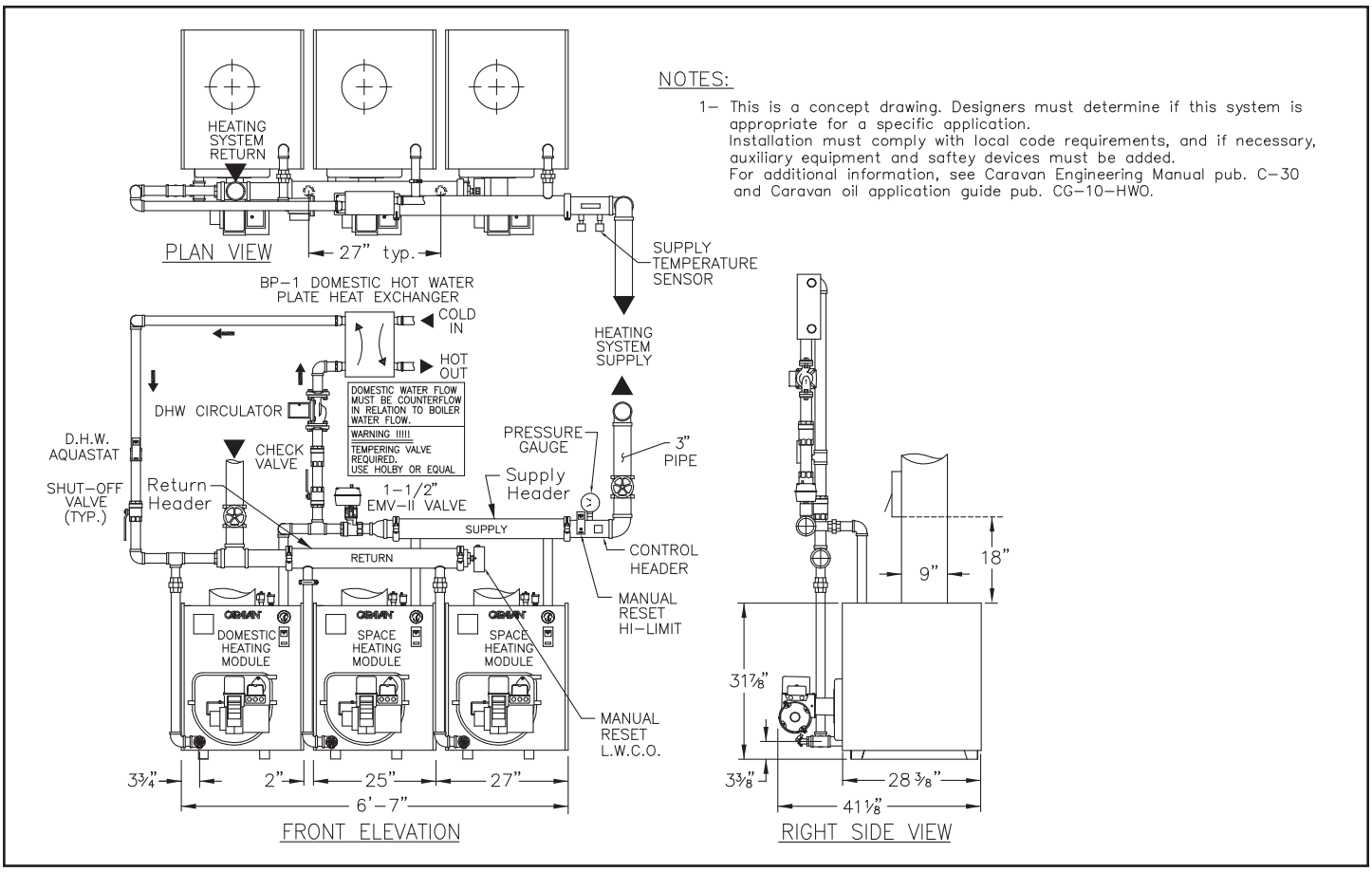

Figure 3. Typical space heat and domestic piping – For primary circulation only.

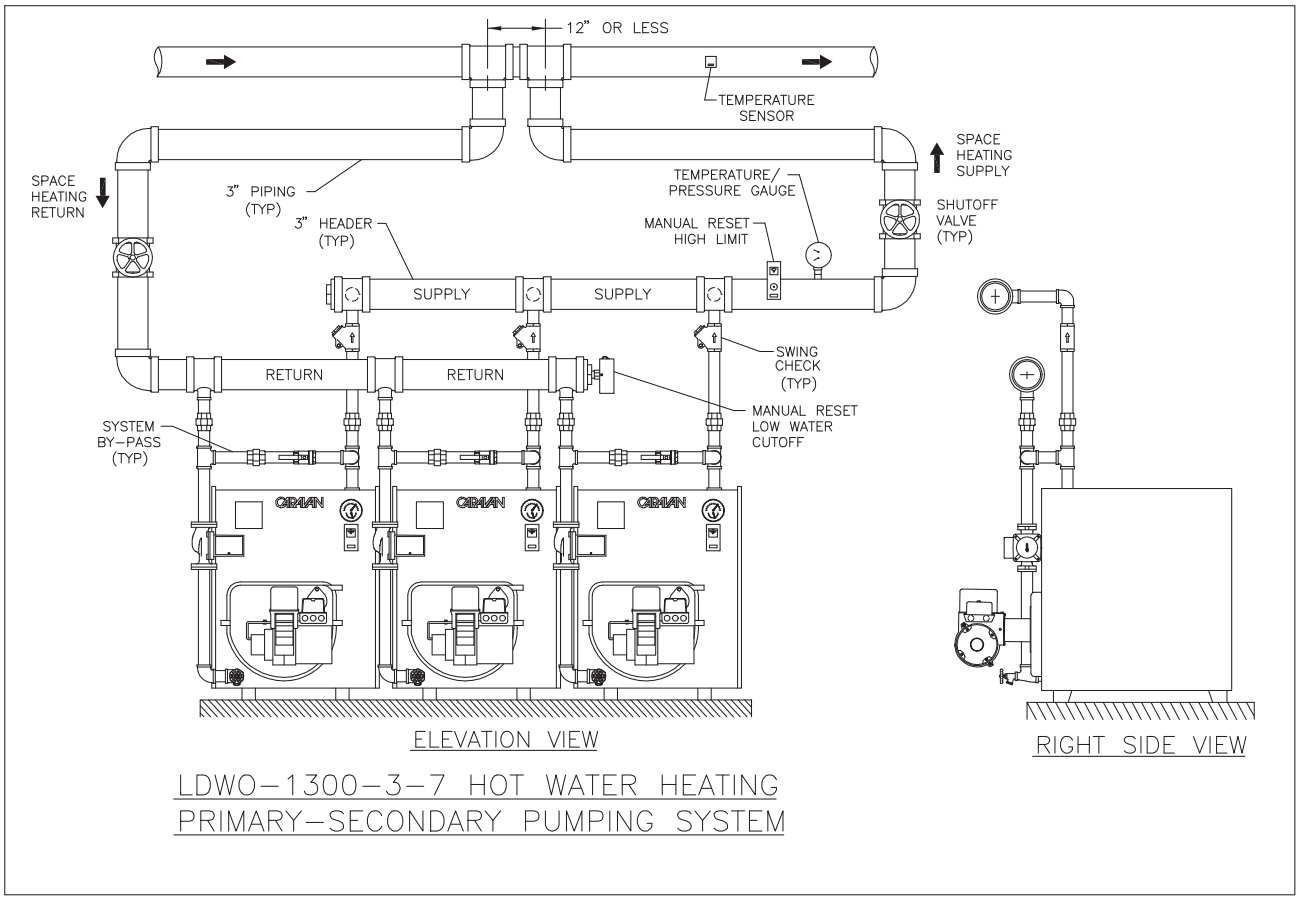

Figure 4. Primary/Secondary piping of modular boiler.

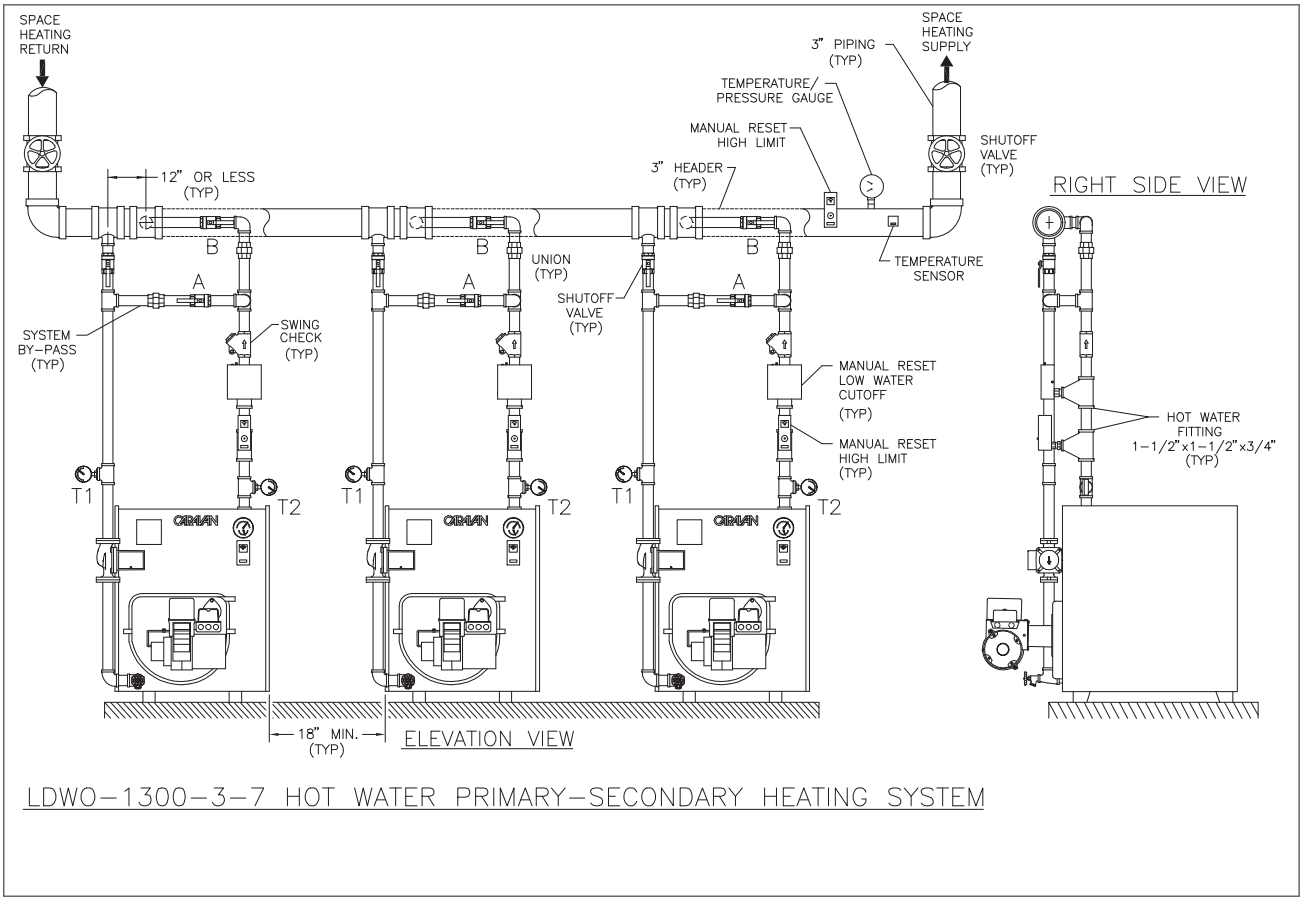

Figure 5. Primary/Secondary piping of multiple boiler.

RECOMMENDED SYSTEM PIPING AND WATER FLOW

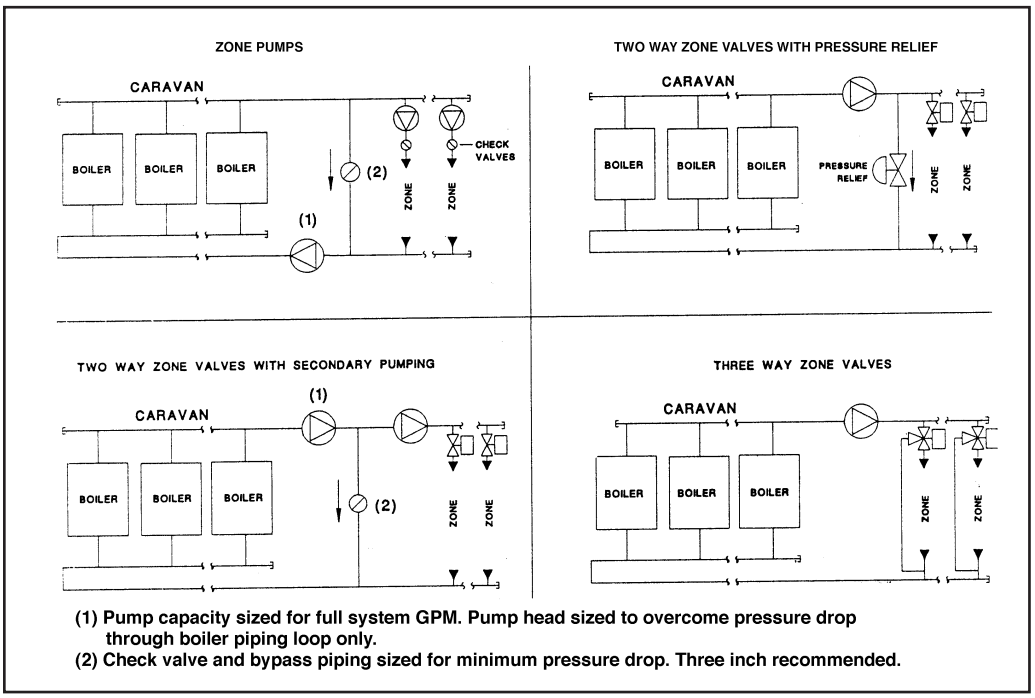

(1) Pump capacity sized for full system GPM. Pump head sized to overcome pressure drop through boiler piping loop only.
(2) Check valve and bypass piping sized for minimum pressure drop. Three inch recommended.

Minimum flow rate formula:
Minimum flow rate through modules =

$$\frac{\text{Gross output (MBH)}}{20{,}000}$$

Note: A water flow proving device is recommended on all Caravan systems.

Figure 6. Recommended boiler piping for variable volume zone circulation

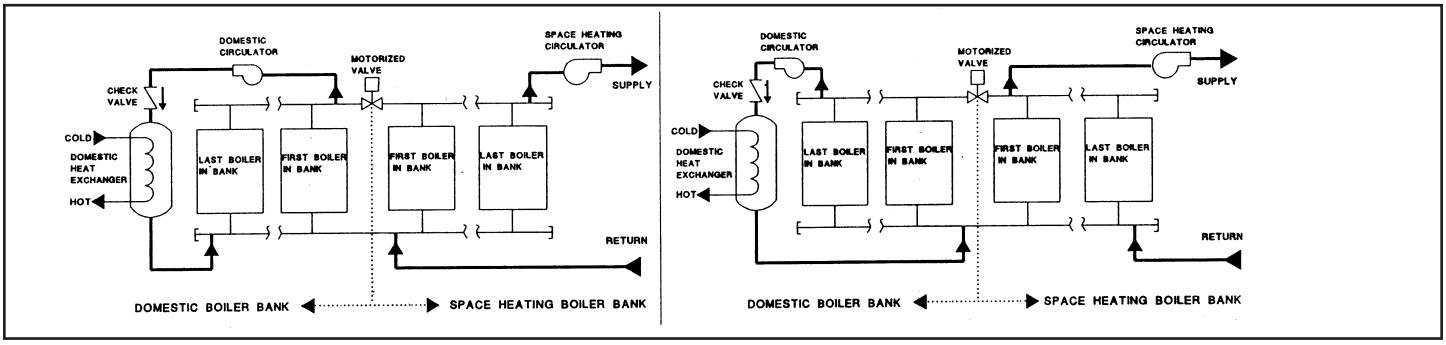

Figure 7. Supply and return piping locations for space heat with domestic hot water

SUGGESTED DOMESTIC HOT WATER PIPING

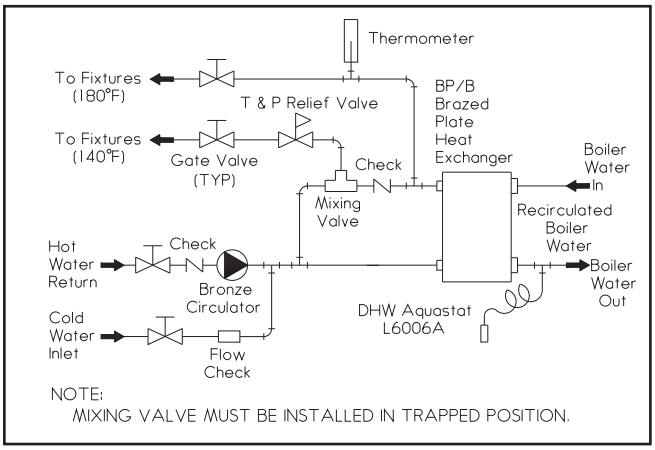

Figure 8: Instantaneous tankless coil—two temperature with recirculation

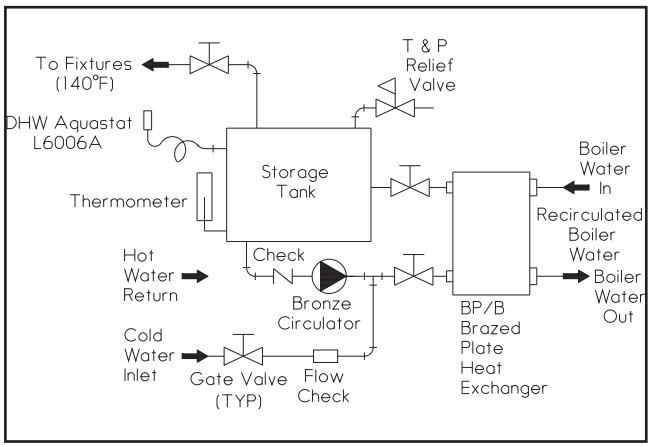

Figure 9: Storage tank from tankless coil with recirculation locations for space heat with domestic hot water

EQUIPMENT INCLUDED
LDWO SERIES — Hot Water Models

- Pre-assembled heat exchangers with built-in air separators
- Insulated baked enamel jacket.
- Flue collector.
- Draft regulator.
- Flame retention oil burner with nozzle and CAD cell.
- Primary burner control.
- Temperature limit.
- Flue brush.
- Module temperature and pressure gauge.
- System pressure and temperature gauge. (unmounted-1 per system).
- Pressure relief valve (unmounted-1 per module).
- Control header (unmounted-1 per system, up to 8 modules).

OPTIONAL EQUIPMENT

- Headers.
- Control System.

Pressure/Temp Rating for flex joint fittings

150 psi	275˚ F

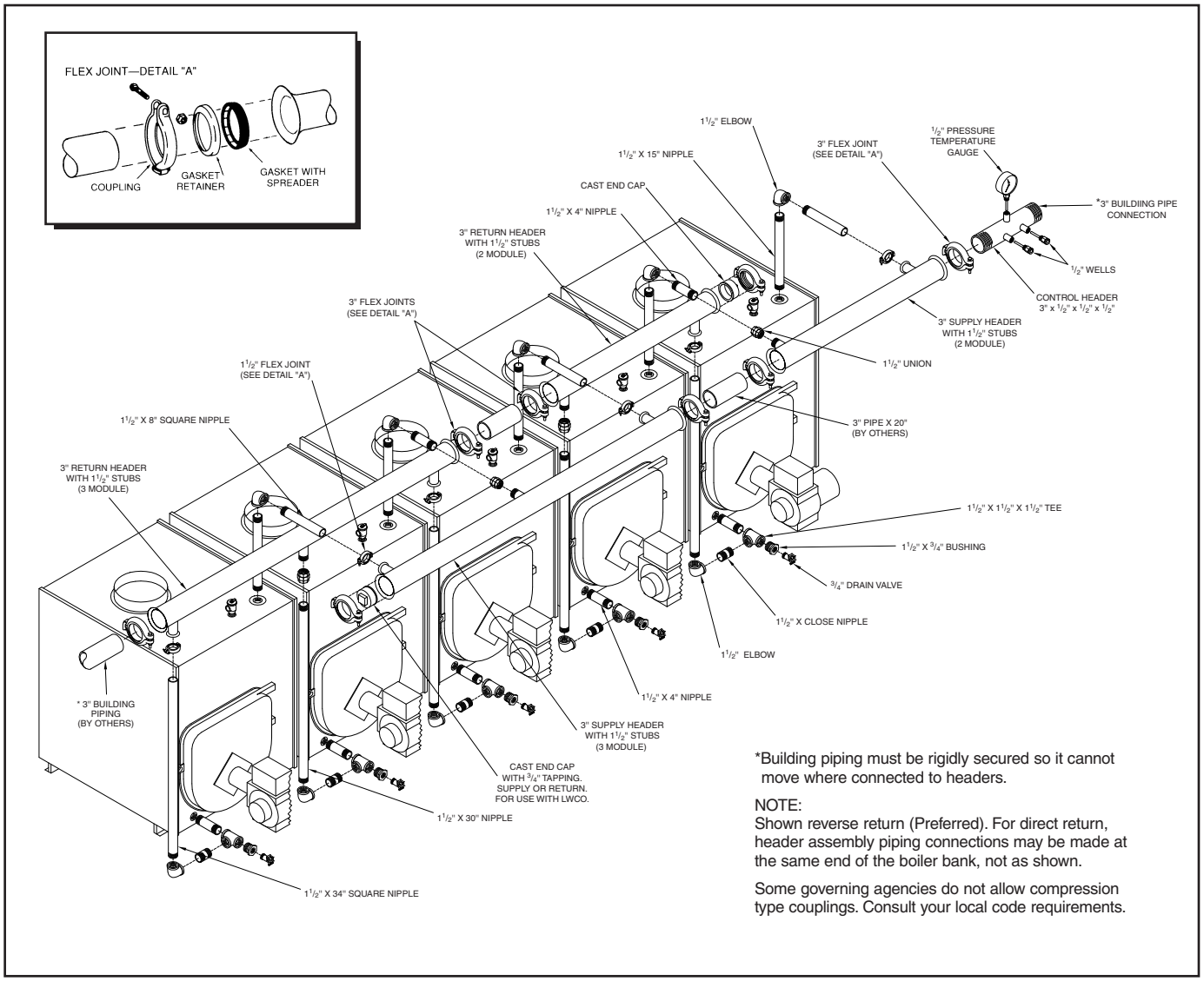

Figure 10. Oil Caravan—optional header assembly for all models LDWO and LWDF hot water Caravan systems.

BOILER ROOM DESIGN

Caravan modular boiler systems allow better utilization of floor space and permit future expansion with minimum cost. Caravan modules are hand truckable, fit through doorways and often may be installed around an existing inoperative boiler. They can be grouped in heating module batteries of single, multiple or angular rows. Oil-fired boiler systems consisting of 9 or more modules should be piped in parallel in two or more batteries. Illustrated below are typical boiler room layouts and dimensional data on the size requirements of oil-fired hot water boilers.

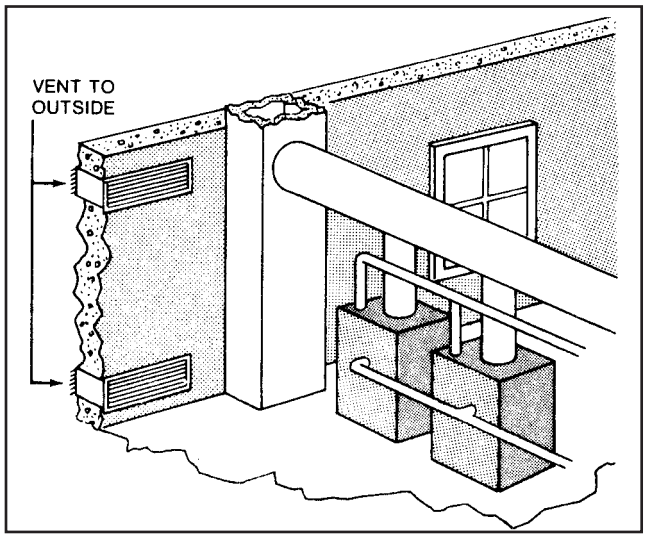

Figure 11. Correct location of combustion-air supply ducts

BOILER ROOM AIR SUPPLY

To ensure safe, efficient operation, the modular boiler system must be supplied with sufficient air to support complete combustion, replacing air entering draft dampers or draft hoods and ventilating the boiler room or areas. For additional information, not listed below, see ANSI,Z223.1, section 5.3.3.

INSTALLATION IN ENCLOSED BOILER ROOM REQUIRES TWO UNOBSTRUCTED OPENINGS FOR PASSAGE OF AIR INTO THE BOILER ROOM:

1. **Air drawn horizontally from outdoors DIRECTLY through an outside wall;** one louvered opening near the floor (below burner air inlet) and one louvered opening near the ceiling (above the highest draft regulator), each opening with a minimum FREE air passage area of **1 square inch per 4000 BTUH** of total system input.

2. **Air drawn horizontally from outdoors through HORIZONTAL DUCTS;** one opening near the floor (below burner inlet) and one opening near the ceiling (above the highest draft regulator), each opening with a minimum FREE air passage area of **1 square inch per 2000 BTUH** of total system input.

3. **Air drawn VERTICALLY from outdoors**; one opening at the floor and one opening at the ceiling, each opening with a minimum FREE air passage area of **1 square inch per 4000 BTUH** of total system input.

4. **Air drawn from inside the building;** one opening near the floor (below burner inlet) and one opening near the ceiling (above the highest draft regulator), each opening with a minimum FREE air passage area of **1 square inch per 1000 BTUH** of total system input.

IF BOILERS ARE INSTALLED ADJACENT TO OTHER FUEL BURNING EQUIPMENT, THE AREA OF FREE OPENINGS MUST BE APPROPRIATELY INCREASED TO ACCOMMODATE THE ADDITIONAL LOAD.

UNLESS PROPERLY CONTROLLED, AVOID THE USE OF FORCED VENTILATION, SINCE IT CAN CREATE AN UNDESIRABLE PRESSURE DIFFERENTIAL BETWEEN BOILER ROOM AND AIR SOURCE.

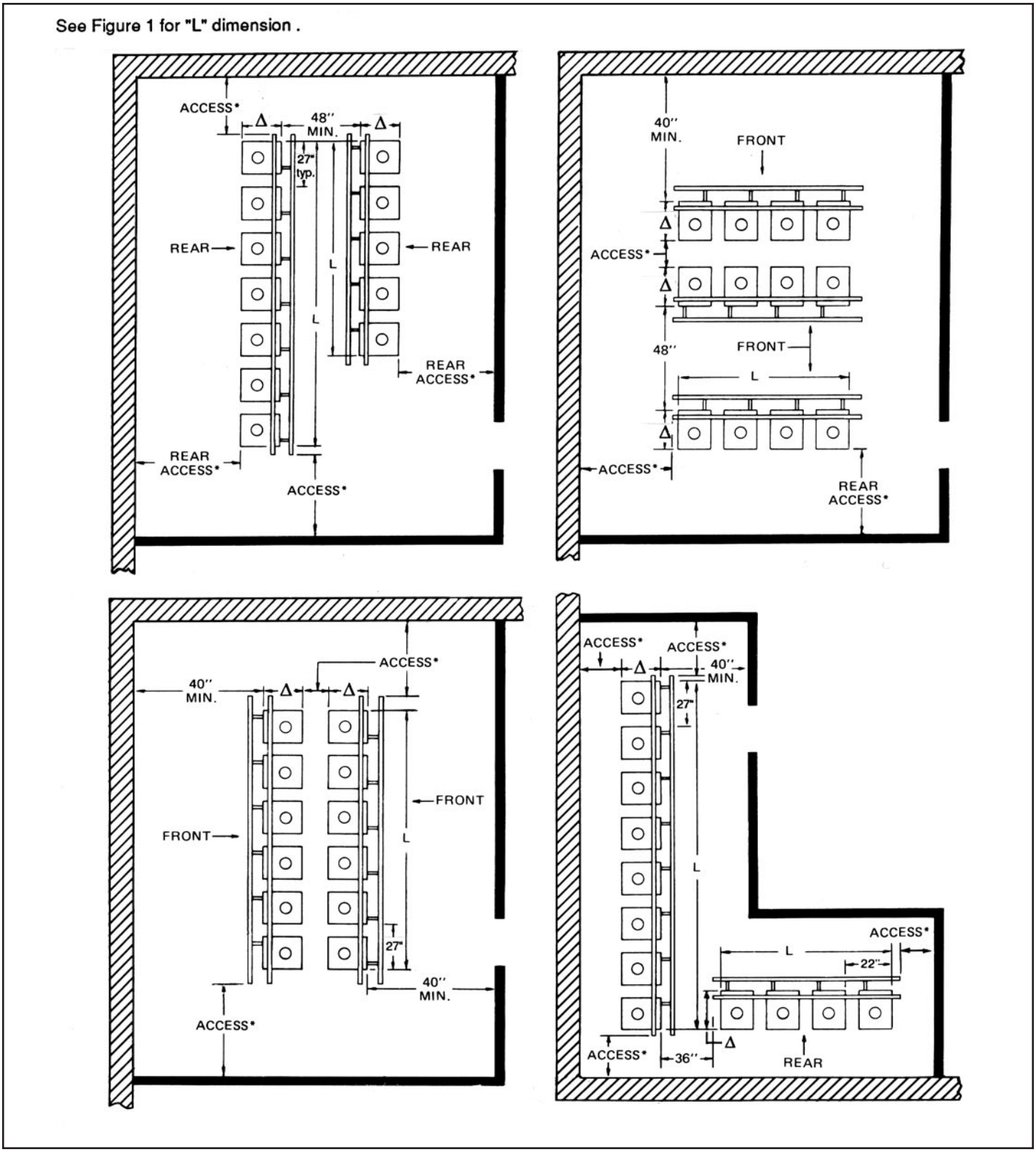

Figure 12. Typical layouts for oil-fired systems

* Caravan can be installed as close as 1" from the wall, local codes permitting. However, 24" is recommended for service inspection access.

Δ See Figure 1 dimensions A and D.

VENTING A OIL-FIRED SYSTEM

A boiler venting system provides draft and an escape path for the products of combustion. In a venting system for an oil-fired Caravan, there are three major components: a riser with draft regulator for each module, a breeching manifold, and a chimney.

Sometimes the venting system for a boiler plant has to be designed to compensate for inadequate chimney conditions. A mechanical draft inducer, properly sized and installed, can usually increase chimney capacity sufficiently to provide proper venting. Where a draft inducer is called for, consult local codes and the recommendations of the mechanical draft inducer manufacturer. Normally, a draft proving device is necessary to permit operation of the boilers only when adequate draft exists.

It is important to note that when considering a mechanical draft inducer, the boiler room air supply requirements must be increased. Consult the draft inducer manufacturer for this information.

Draft Regulator

The draft regulator compensates for excessive draft that can be caused by varying weather conditions. The regulator should be of the barometric-draft type. Once adjusted for a particular venting system, this type regulator automatically compensates for excessive draft to assure optimum operating efficiency.

Breeching

Breeching is a term used to describe a manifold(s) that connects individual boiler modules to a chimney. Breeching is usually constructed of sheet metal having a smooth interior surface with all joints made tight against leakage. The layout of a particular boiler room may require that the modules be arranged in "batteries" with rows either parallel or at right angles. Minimum breeching sizes are given in Table 3.

Table 3. Breeching dimensions for oil-fired systems — LDWO Series

Model No. *	No. of Modules	Breeching Diameter	Minimum Area (sq.in.)	Breeching Length
LDWO-600-2-5	2	11"	84	4'8"
LDWO-750-2-6	2	12"	101	4'8"
LDWO-850-2-7	2	13"	115	4'8"
LDWO-900-3-5	3	13"	123	7'1"
LDWO-1100-3-6	3	14"	148	7'1"
LDWO-1300-3-7	3	15"	170	7'1"
LDWO-1700-4-7	4	16"	189	9'6"
LDWO-2100-5-7	5	18"	233	11'11"
LDWO-2500-6-7	6	19"	277	14'4"
LDWO-2900-7-7	7	21"	320	16'9"
LDWO-3400-8-7	8	22"	365	19'2"

* Dual fuel prefix = LWDF.

Notes:

1. For breeching and chimney sizing over 8 modules, consult factory.
2. Breeching length should be as short as possible. Measurement from the base of the vertical vent to the nearest connected appliance should be limited to 10' or 50% of the total vent height, whichever is greater.

To avoid creating turbulent air patterns in the breeching, it is suggested that individual boiler vent pipes be connected to the breeching as indicated in Figure 13.

The breeching manifold should extend into, but not beyond, the chimney liner. Round breeching is preferable to rectangular breeching.

Chimney

Caravan oil-fired modular boilers operate efficiently with masonry or prefabricated chimneys. This latter type of chimney construction is generally the least expensive.

Minimum chimney sizes and heights are given in Table 4. In addition, the chimney should be high enough to minimize the effects of turbulent winds and high pressure areas common near roof-top obstructions. The National Board of Fire Underwriters recommends that the chimney should extend 3 feet above the roof and be 2 feet higher than any obstruction within 10 feet (figure 13). The use of a vent cap where permitted by code gives additional protection against adverse wind conditions and precipitation.

Table 4. Chimney requirements

Model No. *	No. of Modules	Chimney Liner Inside Dim. †		
		Dia. Inches	Rectangular L x W Inches	Minimum Height Feet
LDWO-600-2-5	2	11"	9¾" X 9¾"	20'
LDWO-750-2-6	2	12"	9½" X 13½"	20'
LDWO-850-2-7	2	13"	13¼" X 13¼"	20'
LDWO-900-3-5	3	13"	13¼" X 13¼"	20'
LDWO-1100-3-6	3	14"	13¼" X 13¼"	20'
LDWO-1300-3-7	3	15"	13" X 17"	20'
LDWO-1700-4-7	4	16"	13" X 17"	25'
LDWO-2100-5-7	5	18"	16¾" X 16¾"	25'
LDWO-2500-6-7	6	19"	16½" X 20½"	25'
LDWO-2900-7-7	7	21"	20¼" X 20¼"	25'
LDWO-3400-8-7	8	22"	20¼" X 20¼"	25'

* Dual fuel prefix = LWDF.

† Dimensions shown are from ASHRAE Guide Equipment Handbook. Also select inside liner dimensions to give area as great or greater than shown in this table. Chimney height is measured from the center line of the breeching to the top of the chimney. Chimney dimensions are approximate, with no manifold elbows or tees; and good vent construction practices. Field conditions vary. It is doubtful that the chimney dimensions shown here will be suitable for all applications. Consult the 2000 ASHRAE Equipment Handbook and Chimney Manufacturers Sizing Handbook.

Sizing Horizontal Breeching Connectors and Chimneys for Oil-Fired Systems

Horizontal breeching connectors shall be constant sized. The chimney and the horizontal breeching connector are sized using table 3.

When there are multiple banks of boilers, the horizontal breeching connector for each bank is sized using table 3. To size the common horizontal breeching connector, add up the total input and refer to table 3 to size.

The minimum chimney will be equal to the size of the largest horizonatl breeching section connected to it.

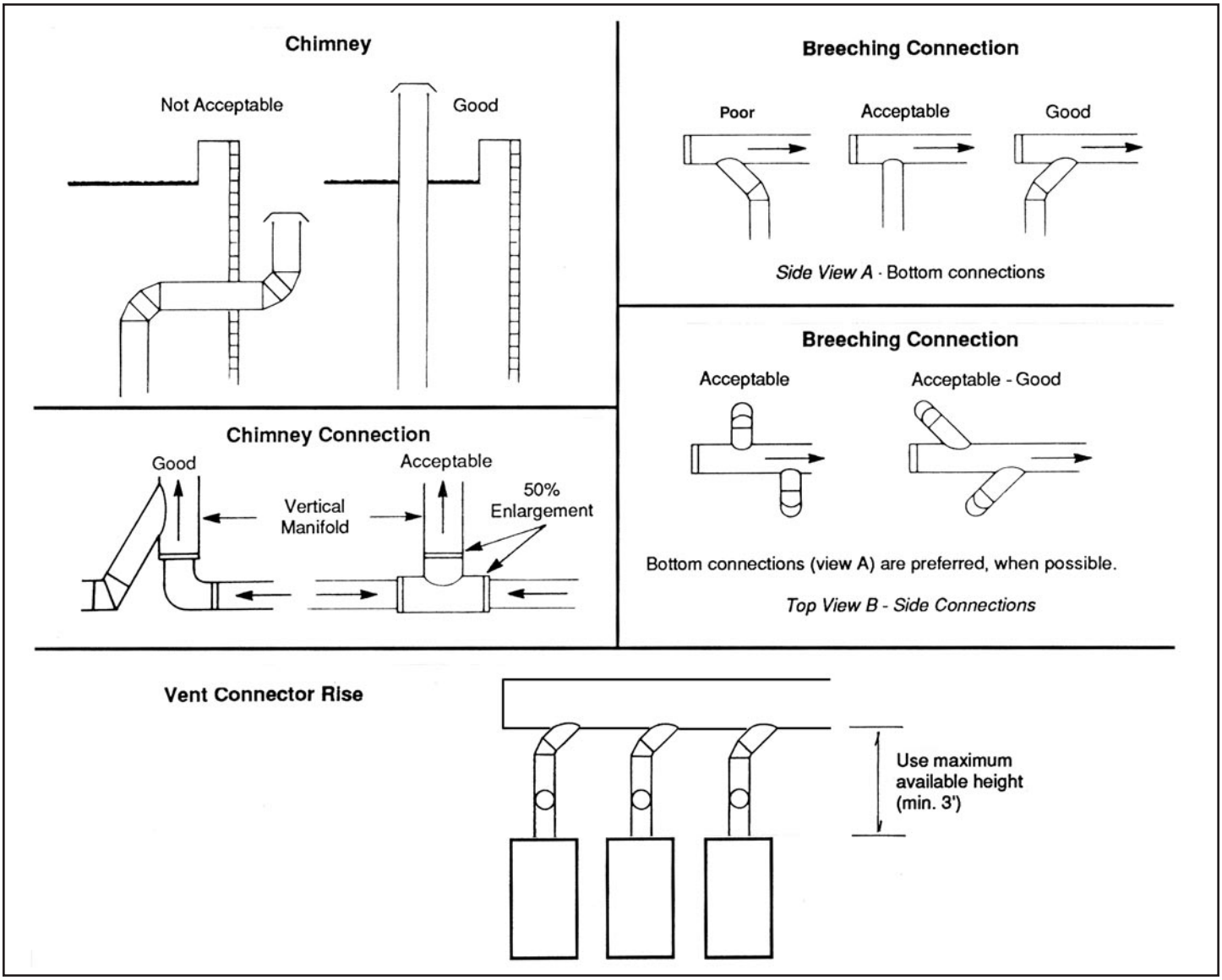

Figure 13. Suggested venting system constructions

FUEL OIL PIPING

FUEL OIL STORAGE FACILITIES

Local codes usually govern the installation of fuel oil storage facilities. However, for areas where no rules have been established, the following information can provide assistance to the system designer.

Storage tank sizing

When calculating minimum fuel oil storage capacity, several variables must be considered. These include: maximum fuel consumption rate, storage space limitations, availability, distance from source of supply, and method of delivery (truck or railroad tank car). Large storage tanks, of course, cost more than smaller ones but the cost is not proportional (e.g., a 10,000 gal. tank does not cost twice as much as a 5,000 gal. tank). And larger tank capacity allows oil purchases usually at lower per gallon rates.

Generally, the storage tank should hold enough oil to sustain continuous operation for 10 days (plus an additional 10% margin to allow for suction stub clearance).

To determine the minimum storage requirement, proceed as follows:

a) Refer to Table 1 to find the maximum hourly oil consumption (GPH) of the system being installed.

b) Multiply the maximum hourly consumption by the probable maximum daily hours of operation to achieve maximum daily consumption.

c) Multiply the maximum daily consumption by 10 (days) and add 10% to obtain the MINIMUM storage capacity.

Requirements for fuel oil storage tanks.

Data in this section is based on the use of steel storage tanks. Where no local codes apply, take the following data into consideration.

a) Inside tanks are usually located in the lowest part of the building. When supply and return lines are piped through the top of the tank, spillage is minimized in the event of leaks.

b) Unenclosed tanks should be at least 7 feet from any open flames or fires.

c) Most fire codes prohibit unenclosed inside tanks exceeding 275 gallons each. Where multiple tanks are installed, the total storage capacity should not exceed 550 gallons unless vaulted.

d) If inside tanks are properly enclosed, the maximum storage capacity can be increased to 5,000 gallons in non-fire-resistant buildings, and to 15,000 gallons in fire-resistant structures.

   NOTE: An enclosure shall consist of walls constructed of 6" reinforced concrete or 8-inch thick masonry with the space between tank and walls filled with sand. If floor above has a load-bearing capacity of 150 lbs./sq. inch or greater and is constructed of fire-resistant material, 1 foot of sand fill over the tank is sufficient. If not, a 5-inch concrete slab, or equivalent, must be employed. An alternative method is to pour a 6-inch thick concrete enclosure directly over the tank (no air spaces).

e) Underground tanks (Figure 14) are to be buried at least 2 feet below grade.

f) Tanks buried beneath buildings ALWAYS require 4-inch reinforced concrete slab covers that extend 1 foot beyond tank in all directions.

g) Fiberglass and/or double-walled tanks may be required. Check your local codes. Underground metal tanks should be painted with heavy asphaltum, rust-resistant paint or be of double walled construction (check local codes). ***DO NOT*** install tank in bed of cinders (cinders contain sulphur, which becomes corrosive when wet).

   NOTE: Before installing underground tanks, check local surface water conditions. Where potential problems exist, concrete anchors should be provided.

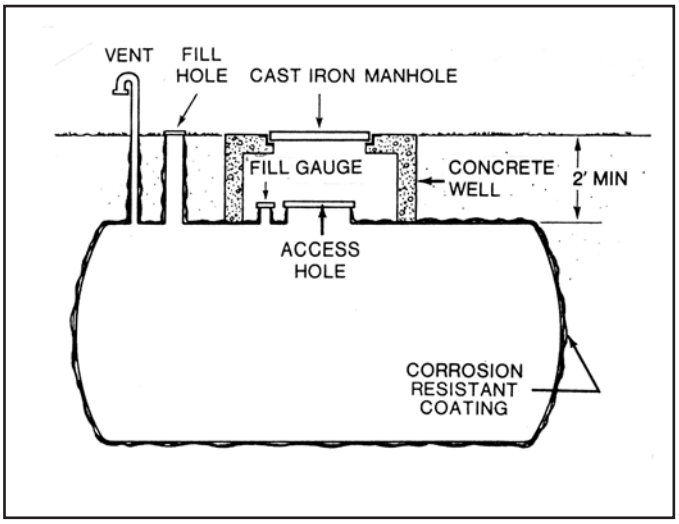

Figure 14. Typical example of properly installed underground fuel tank

FUEL OIL DELIVERY SYSTEMS FOR SINGLE FUEL BURNERS

General

Three methods for delivering oil to the individual burners are described herein. These methods are chosen to provide tempered, filtered and air-free oil to the individual burners. Consistent oil quality will optimize burner operation over longer periods.

There are variations to the methods described herein which, if applied properly, will result in acceptable operation. These methods are for reference only. Local codes vary. It is important to check all codes for compliance.

Information herein has been compiled using data from industry sources, including companies such as Mitco, Webster, Suntec and Tuthill. For additional information on these products, contact the representative in your area.

MFG data and safety codes vary with regard to maximum fuel unit inlet pressure. Pay particular attention to the gravity oil head. Be sure to add oil pressure reducing valves in the event that codes or MFG data will be exceeded. 5 psi is equivalent to approximately 12 feet in height. (See "H" dimension.)

Storage tank above burners *(Figure 15)*

A simple one pipe connection from the supply tank to each burner helps to eliminate air in the oil line and tempers the oil in the pipe as it travels slowly to the burners.

This method maintains consistent fuel oil quality to the individual burners and therefore decreases the frequency of maintenance and service. When a component breakdown occurs in a burner or in the supply system, the trouble is easily found and service is restored quickly.

Storage tank below burners and gravity tank above burners *(Figure 16)*

Oil is automatically and constantly maintained in the supply tank at a level sufficient to meet all burner needs. As oil is used, the pressure drop is sensed by a pre-set automatic pressure switch, which signals the booster pump to restore proper level. There is no practical limit on the height or distance that the motorized pump can deliver oil to the supply tank.

The great advantage of the booster pump along with a gravity tank is that it accomplishes its purpose in the most simple and direct manner. This results in the most economical installation, with the shortest possible runs of pipe and wire. It also enables the installer to adapt with ease to almost any building configuration. A simple one pipe connection to each burner helps eliminate air in oil line with constant flow of fuel and tempers the oil.

Simplicity of operation of the individual burner decreases the chances that service will be needed. When a component breakdown occurs in a burner or in the supply system, the trouble is easily found and service is restored quickly.

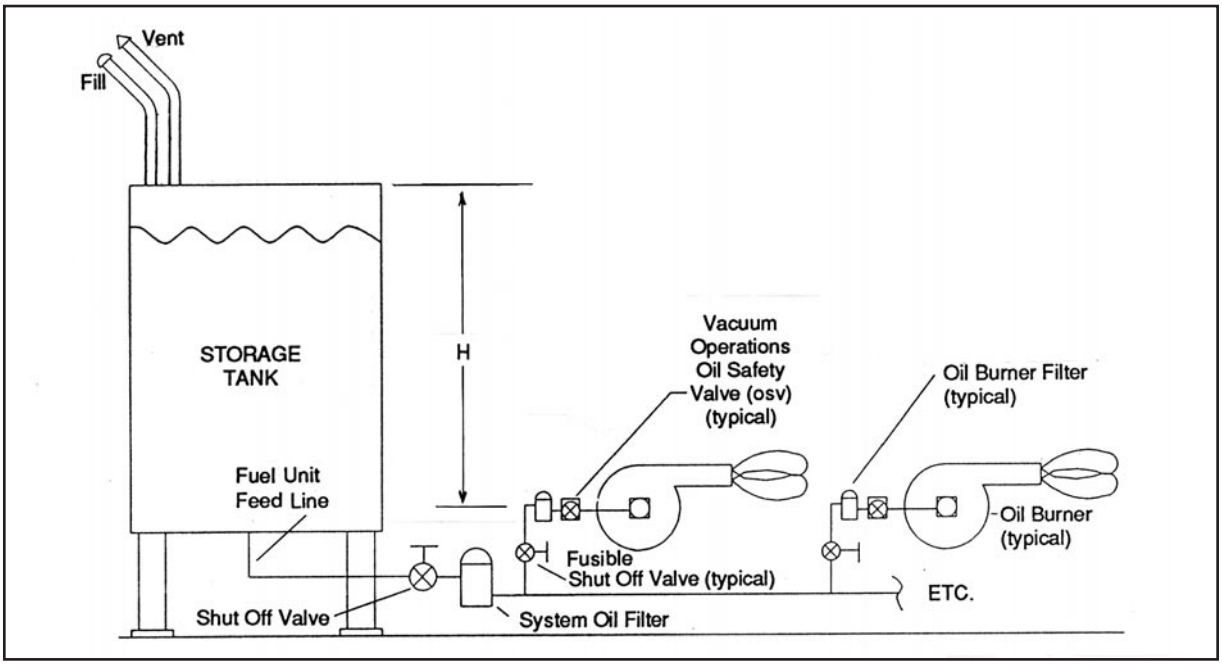

Figure 15. Storage tank above burners

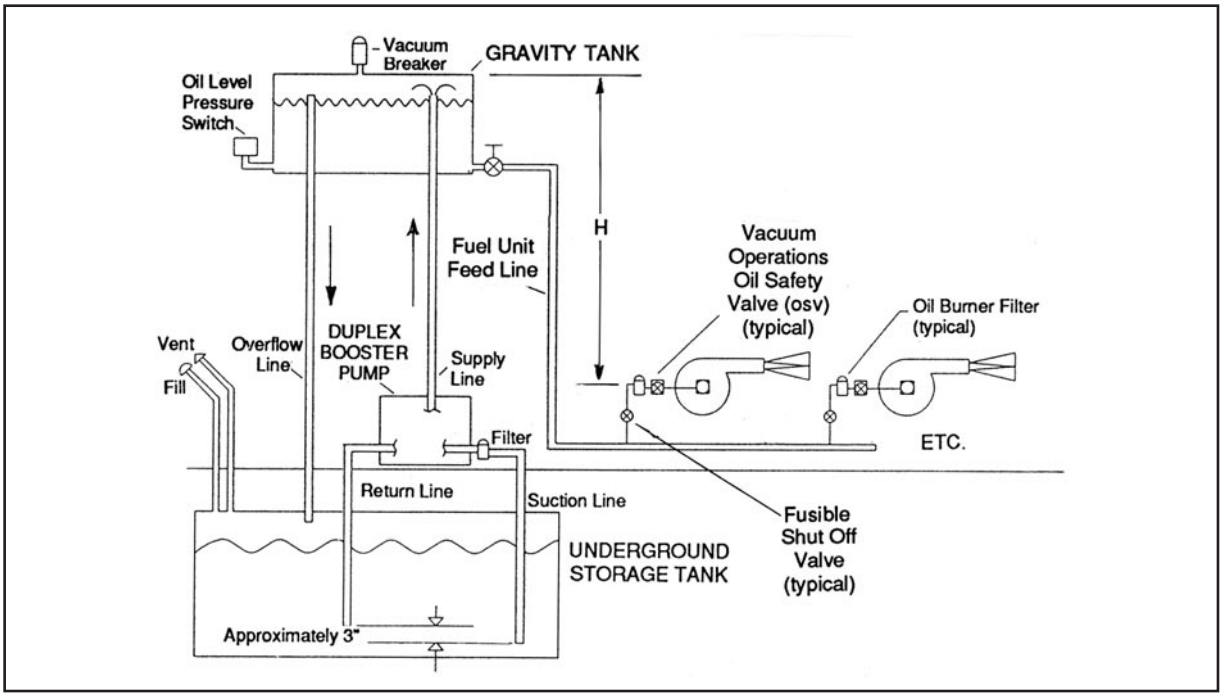

Figure 16. Storage tank below burners

Figure 17. Wiring diagram for gravity feed booster- pump operation

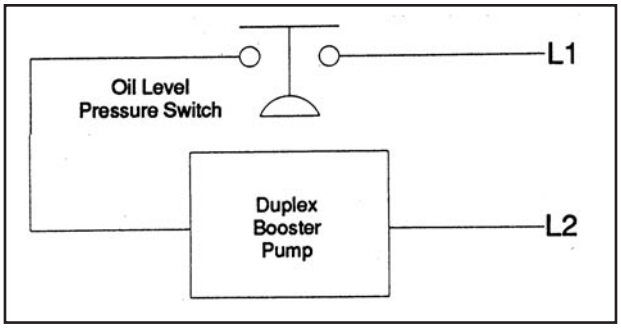

Components usually required are a motorized booster pump of sufficient capacity, gravity tank and mounting hardware, automatic oil level pressure switch, vacuum breaker and necessary check valves and fittings. Additional information can be obtained from Mitco Manufacturing, Hicksville, New York.

Duplex booster pumps are desirable to provide standby capability, in the event of booster pump failure.

Sizing booster pump
To determine the correct size of a booster pump:

a) Using Table 1, find maximum total firing rate of the boiler system being installed.
b) Find the vertical and horizontal dimensions of the booster pump's suction line.
c) Make sure the suction line lift and length are with capabilities of typical booster pumps. Refer to Table 5. (This data is based on Suntec models BH-1030M at 30 GPH, and BH-1050M at 50 GPH or equivalent.)

NOTE: If lift is excessive (max. 6" Hg one stage, 15" Hg two stage), contact pump manufacturer with exact requirements. If total length is too long, increase suction line diameter.

d) Using Table 6, find correct supply line size.

Table 5. Maximum booster pump suction line length (1)

Vertical Lift (2)	Maximum Total Suction Line Lengths (3) 1/2" O.D. copper tubing (4)	
	Firing Rates up to 30 GPH (5)	Firing Rates up to 50 GPH (6)
0 - 7'	100'	63'
8 - 10'	80'	53'
11 - 13'	63'	41'
14 - 15'	52'	34'

Table 6. Supply line sizes for high-volume fuel oil delivery systems (7)

Firing Rate	Maximum Total Supply Line Length (8)		
Up to 30 GPH (5)	300'	800'	2500'
Up to 50 GPH (6)	175'	350'	1500'
Supply Line Size	½" O.D. tube	½" pipe	¾" pipe

Table 7. Boiler feed line sizes (9)

Total Length Maximum	Firing Rates up to 30 GPH (5)	Firing Rates up to 50 GPH (6)
25'	½" O.D. tube	½" O.D. tube
75'	½" pipe	½" pipe
200'	¾" pipe	¾" pipe

(1) Defined as the connection distance between storage tank and inlet of booster pump.
(2) Height of booster pump inlet above bottom of storage tank. If higher lift is needed, contact booster pump manufacturer with exact requirements.
(3) Total suction length equals vertical lift plus horizontal distance between suction line connection at storage tank and inlet of booster pump.
(4) 5/8" tubing allows maximum horizontal distance between supply tank outlet and booster pump inlet to be safely increased by 250%.
(5) Maximum fuel oil consumption rate with Suntec BH-1030M pump.
(6) Maximum fuel oil consumption rate with Suntec BH-1050M pump.
(7) Supply line is defined as the connection between the outlet of the booster pump and the inlet of the supply tank.
(8) Total supply line length equals vertical lift plus horizontal distance between booster pump outlet and supply tank inlet.
(9) Boiler feed line is defined as the connection between the gravity feed tank and the furthest burner.

Table 8. Line Length for Two-Stage Fuel Unit

Two Pipe Lift Ht.	1/2" O.D. Tubing		5/8" O.D. Tubing	
	A	B	A	B
1'	118	99	328	276
2'	113	95	313	263
3'	107	90	298	250
4'	102	86	283	237
5'	96	81	268	225
6'	91	76	253	212
7'	86	72	238	200
8'	80	67	222	187
9'	75	61	207	174
10'	69	58	192	161
11'	64	54	177	148
12'	58	49	162	136
13'	53	44	147	123
14'	47	40	131	110
15'	42	35	116	98

A = B82 Series Suntec Pump 63 GPH gear capacity.
B = B89 Series Suntec Pump 75 GPH gear capacity.

CONTROLS

THE BOILER STAGING CONCEPT

The heart of the Caravan boiler plant is a temperature-actuated control system that automatically stages only those boiler modules needed to meet the heating demand in a given period, thereby conserving fuel.

In a staging control system, each stage ordinarily activates one boiler module. With appropriate wiring, multiple modules can be grouped within a stage.

During a fluctuation in heating requirements, a large central boiler cycles on and off to match heat output to building demand. A staged modular boiler system, on the other hand, will energize only as many modules as the system load requires. Only one stage cycles at a time. The other stages remain off or operate continuously, thereby performing at peak efficiency. For example, in a 10 module boiler system, with the heating load at 61% of capacity, six of the modules operate continuously at peak efficiency. Fractional heating requirements are supplied by the seventh "cycling" module, while the remaining three modules are "off." This is in contrast to a single large central boiler that simply cycles on and off, resulting in lower efficiency.

Over-sizing is a major factor in poor system efficiency. Most of the time a single central boiler is oversized. Historical data shows that many single central boilers are considerably oversized even at the outdoor temperature for which they were designed. Modular boiler systems are not oversized by more than a portion of one module, regardless of the load.

The Caravan control system automatically compensates for seasonal temperature changes. It energizes more or fewer modules depending on changes of outside temperature, system water temperature, or both. Modules save energy by operating in long cycles at full-rated output and maximum efficiency.

CONTROL SYSTEM SELECTION

Slant/Fin offers two controls to step fire a hot water Caravan system. The SC-3 and SC-9 controls fulfill a wide range of applications. They control the boiler system and are not intended to be the sole building temperature control. They do not replace zoning the system or the thermostats that control these zones.

SC-3 Control

The SC-3 control allows up to 3 stages in a Caravan system. Generally each stage controls 1 module. However, it is possible to have more than 1 module activated with each stage.

Standard programmable features include: system activation or de-activation based on outdoor temperature; minimum target supply water temperature; adjustable design target supply water temperature; adjustable delay between stages; adjustable outdoor temperature and indoor design temperatures.

The view menu on the control includes error messages, actual outdoor air temperature, actual supply water temperature, target supply water temperature and running time for each stage.

This control can be programmed as follows:

1. **Outdoor reset:** The supply water temperature is automatically adjusted up or down based on outdoor temperature. The control automatically controls the number of modules required to maintain required supply water temperature.
2. **Setpoint temperature:** The control can be programmed to maintain a set supply water temperature. The control automatically controls the number of modules activated to maintain the setpoint temperature.

SC-9 Control

The SC-9 control allows up to 9 stages of operation for space heating, domestic water or combination, in a Caravan system. Generally each stage controls 1 module. However, it is possible to have more than one module activated with each stage.

Standard programmable features include: system activation or de-activation based on outdoor temperature; minimum target supply water temperature; adjustable design target supply water temperature; adjustable delay between stages; adjustable outdoor and indoor design temperatures; delay to allow combustion air damper to open; ability to provide equal run time rotation of boiler modules; fixed lead of a module when Caravan system activates; first on/last off or first on/first off for modules; control of primary circulator and periodic exercising of primary circulator when system is inactive.

The view menu on the control includes error messages, actual outdoor air temperature, actual supply water temperature, target water temperature, running time for each stage and the difference between supply water and return water temperatures.

The SC-9 can be programmed as follows:

1. **Outdoor reset:** The supply water temperature is automatically increased as outdoor temperature decreases and decreased as outdoor temperature increases. The control activates only the number of stages required to maintain the required supply water temperature.

2. **Setpoint temperature:** The control maintains a set supply water temperature. The control activates only the number of stages required to maintain the setpoint temperature. Setpoint temperature may be used for a Caravan system that is dedicated for use as volume water heating.

3. **Domestic hot water:** The domestic hot water controls override the SC-9 control for only those modules used to heat the domestic hot water. The modules for domestic hot water are isolated from space heating system until demand for domestic hot water is satisfied. The modules not used for domestic hot water heating remain under control of SC-9 control.

   Slant/Fin offers domestic hot water control packages and external tankless heaters as options for use with the SC-9 control.

BILL OF MATERIALS FOR SC SERIES CONTROLLERS

Material List for SC-3

- SC-3 modular boiler control (part# 435-084)
- 1 Outdoor sensor (part # 339-070)
- 1 Universal sensor to be used as supply water sensor (part # 339-071)
- 1 Plastic tie strap

Material List for SC-9

- 1 SC-9 modular boiler control (part # 435-085)
- 1 Outdoor sensor (part # 339-070)
- 2 Universal sensors (part # 339-071)
  - 1 to be used as supply water sensor
  - 1 can be used as return water sensor
- 2 Plastic tie straps

Other Options include:

- Immersion well for supply water sensor: to be installed in control header supplied with Caravan
- High Limit (manual reset) and Immersion Well: to be installed in control header supplied with Caravan
- Low Water Cut-Off (manual reset): to be installed in modular boiler headers above modules cast iron heat exchanger
- Domestic Hot Water Control Packages: components include EMV valve; setpoint aquastat L6006A with immersion well. This is to be used with external heat exchanger such as Caravan BP series brazed plate heat exchangers.

Circulators, switches, wiring and other relays are provided by contractor.

FIELD WIRING AT MODULES

Figure C1 OIL FIRIED BURNER WIRING

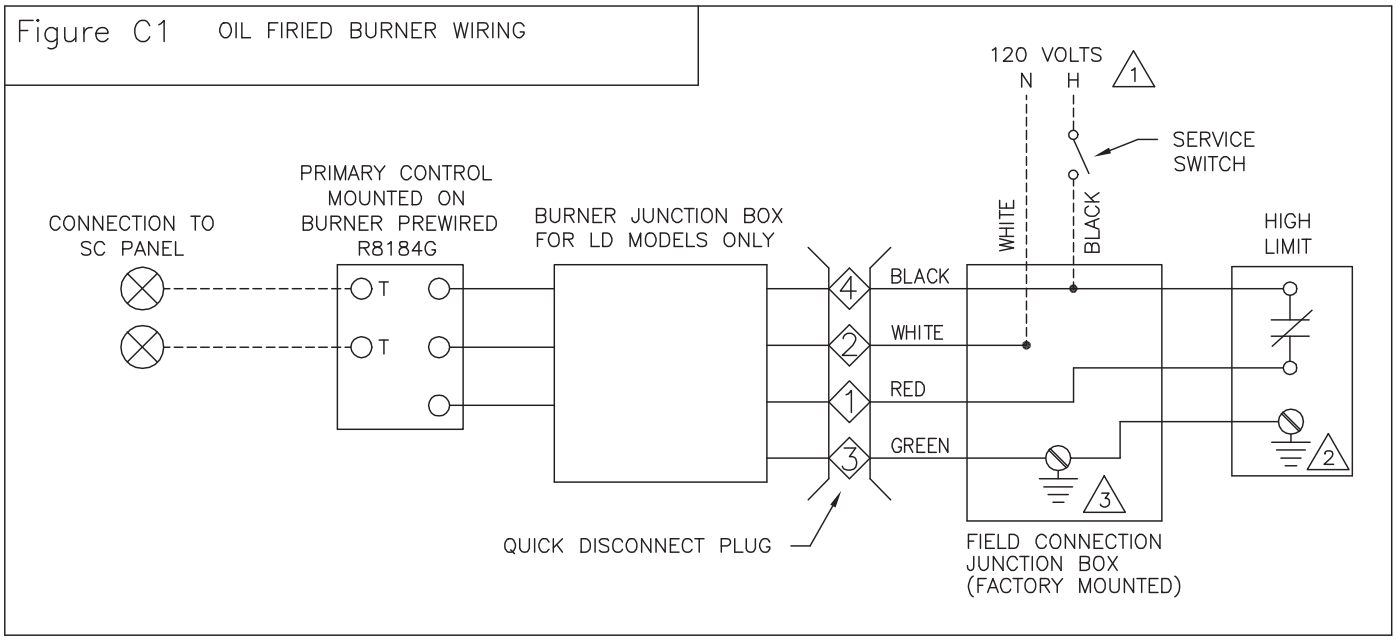

Figure C2 MULTIPLE MANUAL RESET HIGH LIMIT WIRING (IF USED)

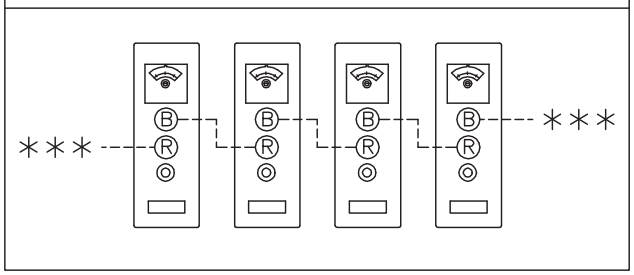

Figure C3 MULTIPLE HYDROLEVEL 550 L.W.C.O. WIRING (IF USED)

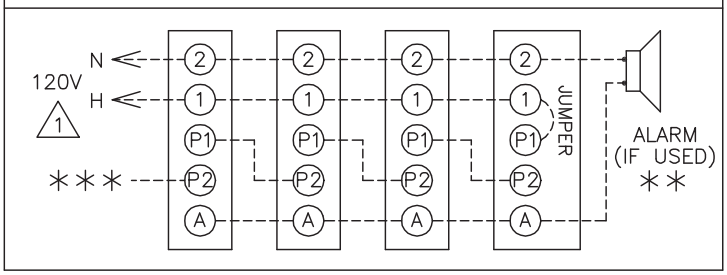

Figure C4 MM 750-MT-120 L.W.C.O. ALTERNATE WIRING (IF USED)

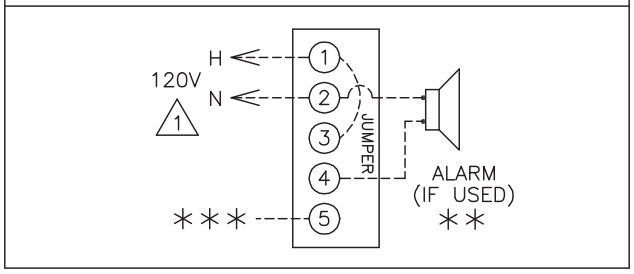

Figure C5 MULTIPLE MM 750-MT-120 L.W.C.O. WIRING (IF USED)

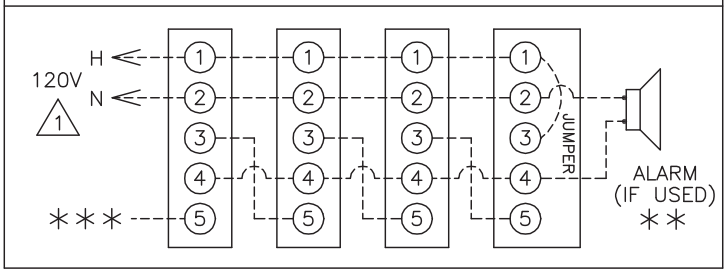

1 – PROVIDE DISCONNECT MEANS AND OVERLOAD PROTECTION AS REQUIRED BY LOCAL CODE.

2 – CONTROL CASE MUST BE CONNECTED TO EARTH GROUND. USE GROUND SCREW PROVIDED.

3 – GROUNDING CONDUCTOR: TWO GREEN GROUND WIRES ARE FACTORY CONNECTED TO THE GREEN GROUND SCREW IN THIS BOX. FIELD WIRE A GROUNDED CONDUCTOR TO THIS SCREW TOGETHER WITH THE TWO GREEN FACTORY CONNECTED GREEN GROUND WIRES.

** – OPTIONAL ALARM CIRCUIT BY CONTRACTOR.

*** – REFER TO SC-3 OR SC-9 WIRING DIAGRAM FOR PROPER WIRE CONNECTION.

LEGEND:
------ FIELD WIRING
——— FACTORY WIRING

SC-3 SYSTEM WIRING DIAGRAM

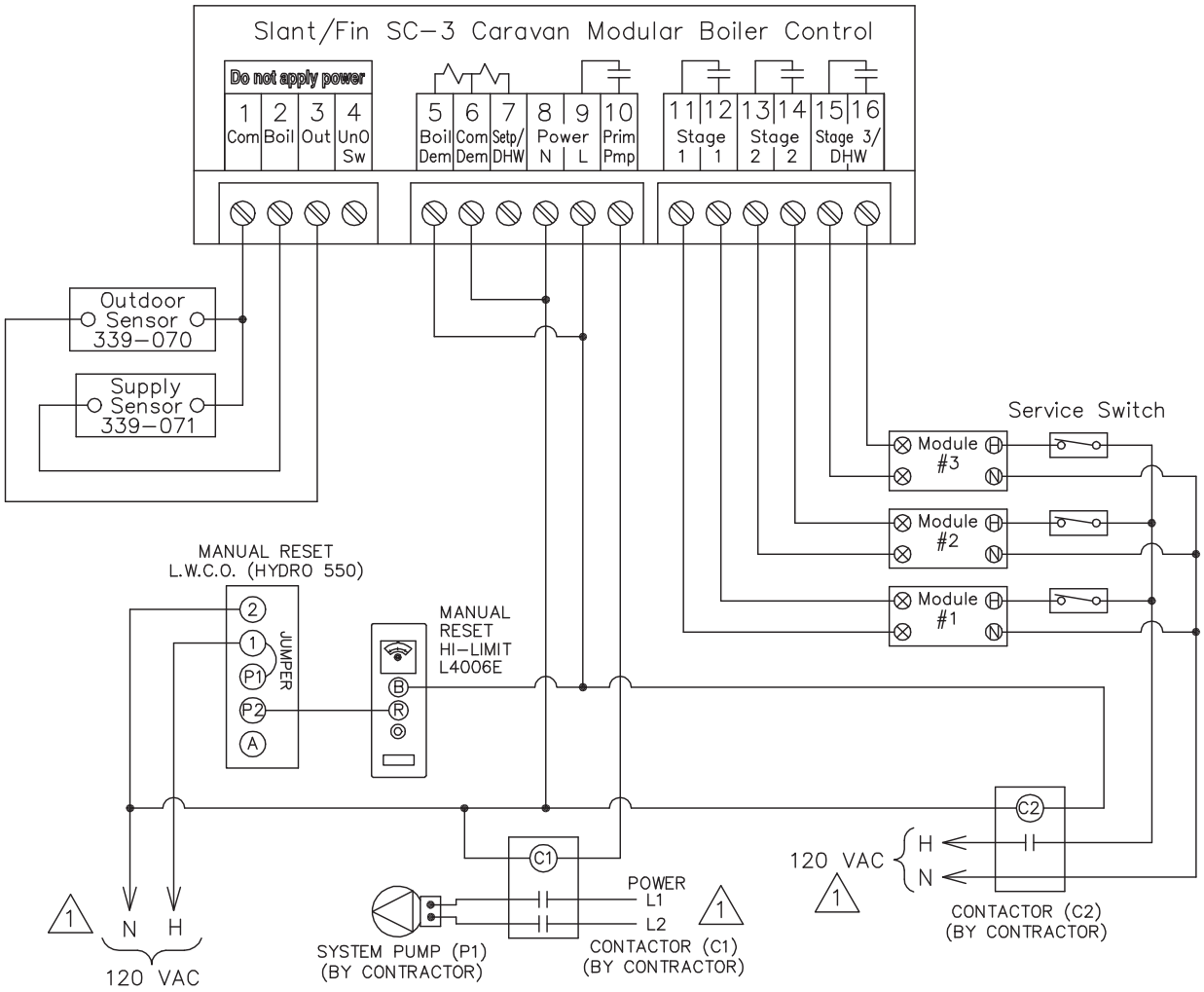

Notes:

1 – Provide Disconnect Means and Overload Protection as Required by Local Code.

2 – Single Pole Contactors Shown, Multiple Pole Contactor May be Used. Each Burner is Rated @ 6 FLA, Size Contactor Accordingly.

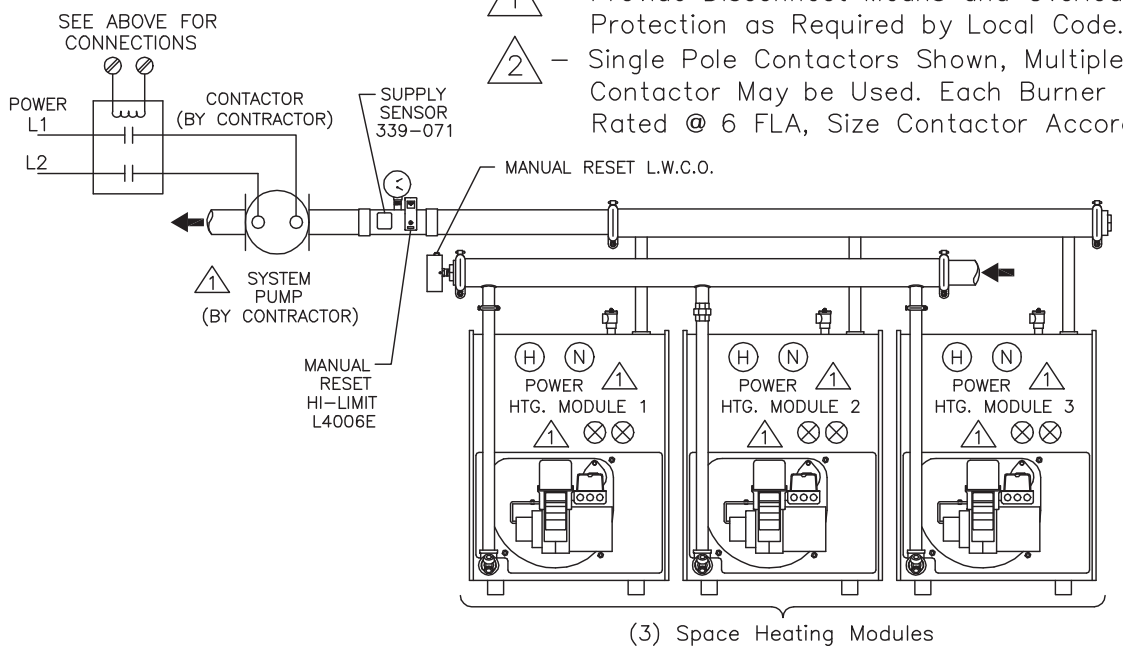

SC-3 LADDER WIRING DIAGRAM

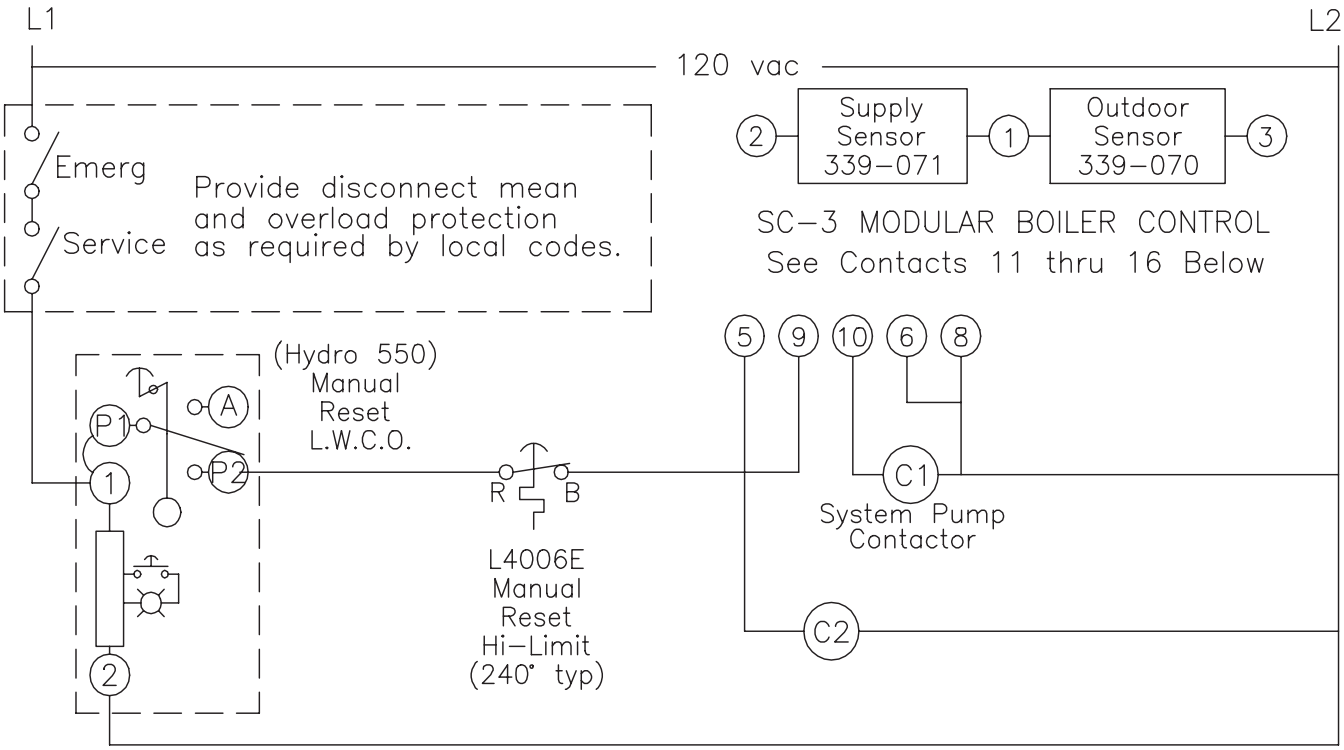

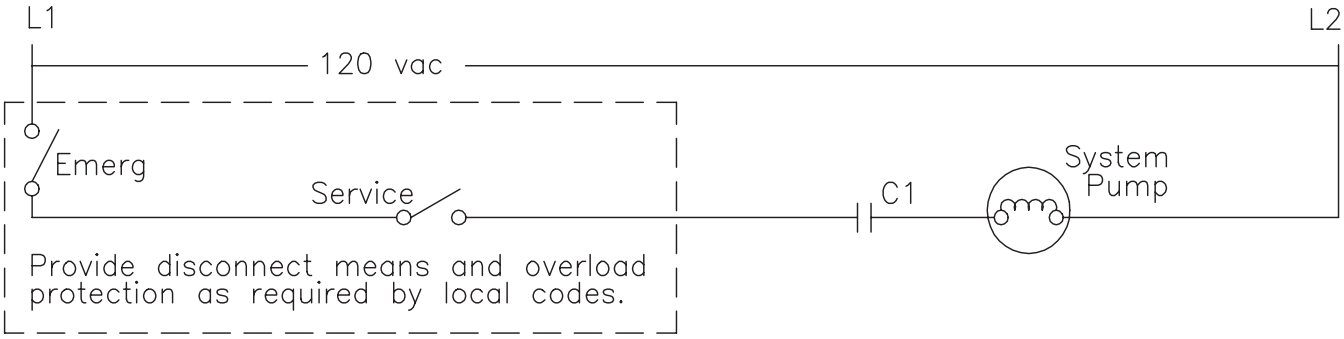

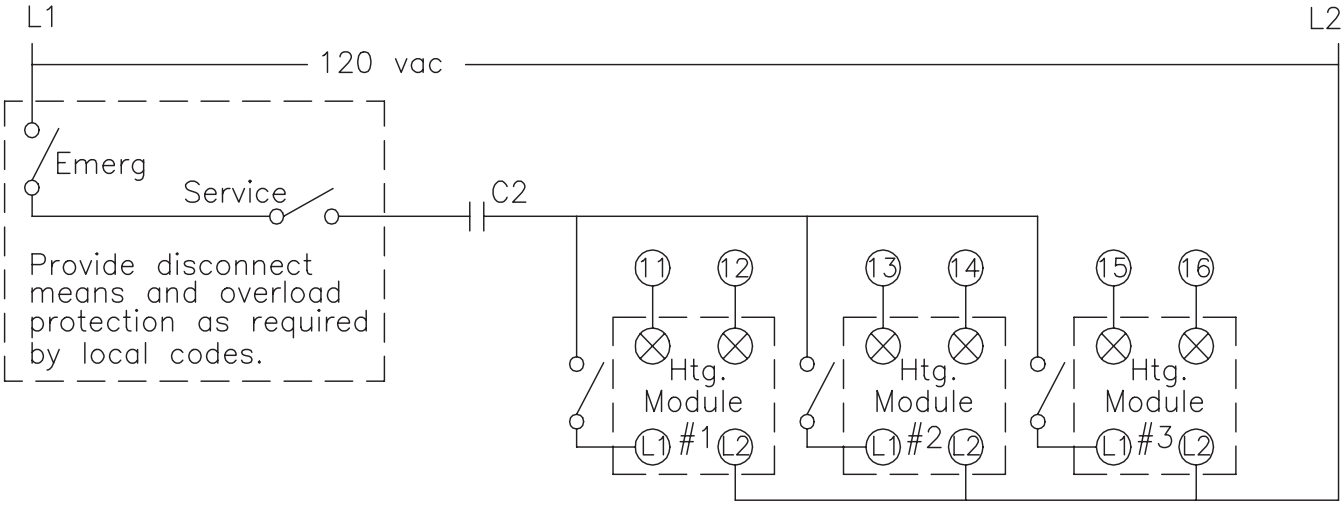

⊗ – SEE FIG. C1 FOR CONNECTION AT MODULE.

SC-9 SPACE HEATING WIRING DIAGRAM

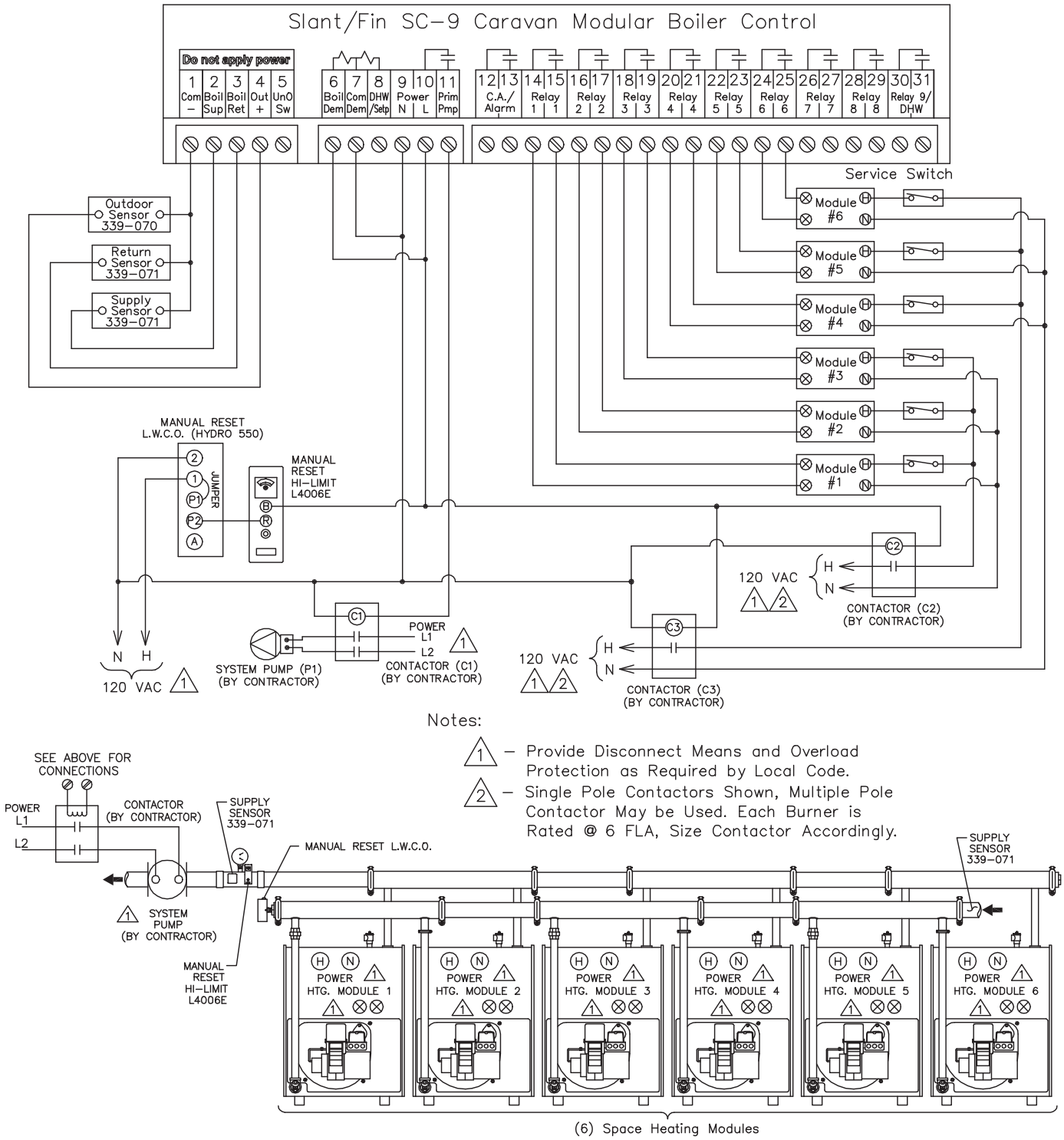

SC-9 SPACE HEATING LADDER WIRING DIAGRAM

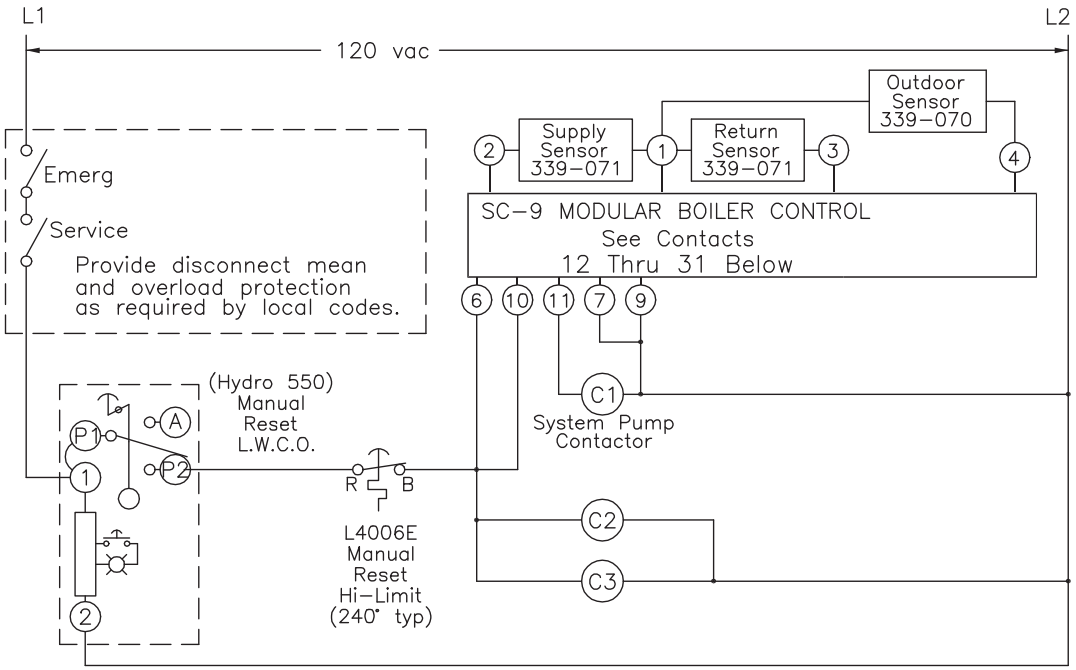

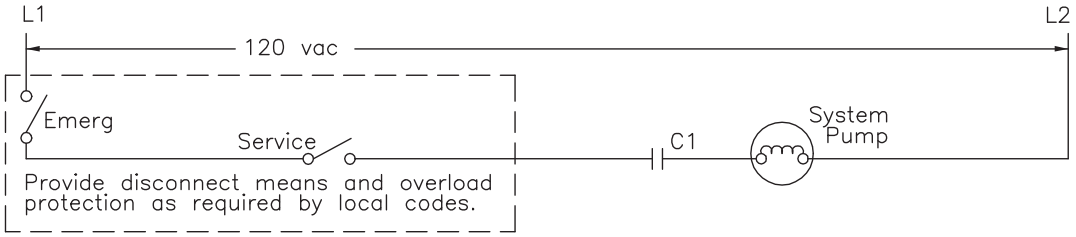

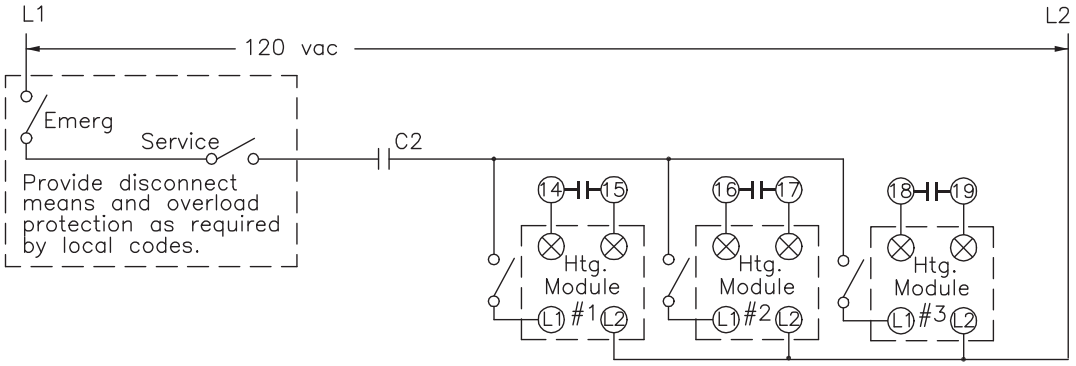

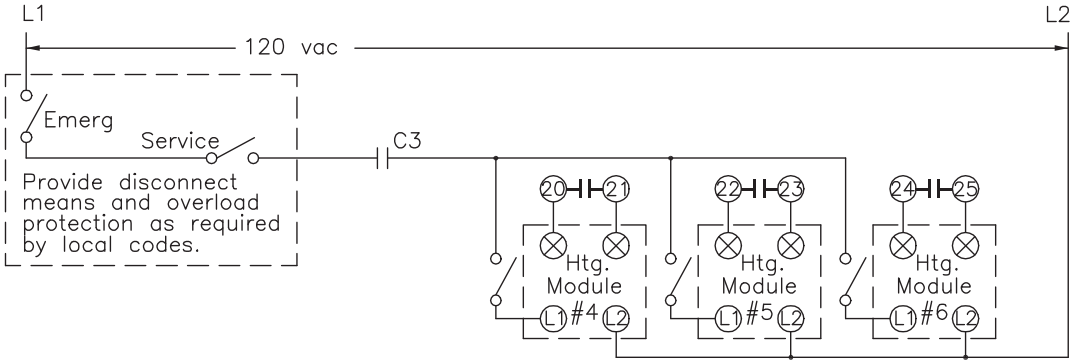

⊗ – SEE FIG. C1 FOR CONNECTION AT MODULE.

SC-9 SPACE AND DOMESTIC HOT WATER WIRING DIAGRAM

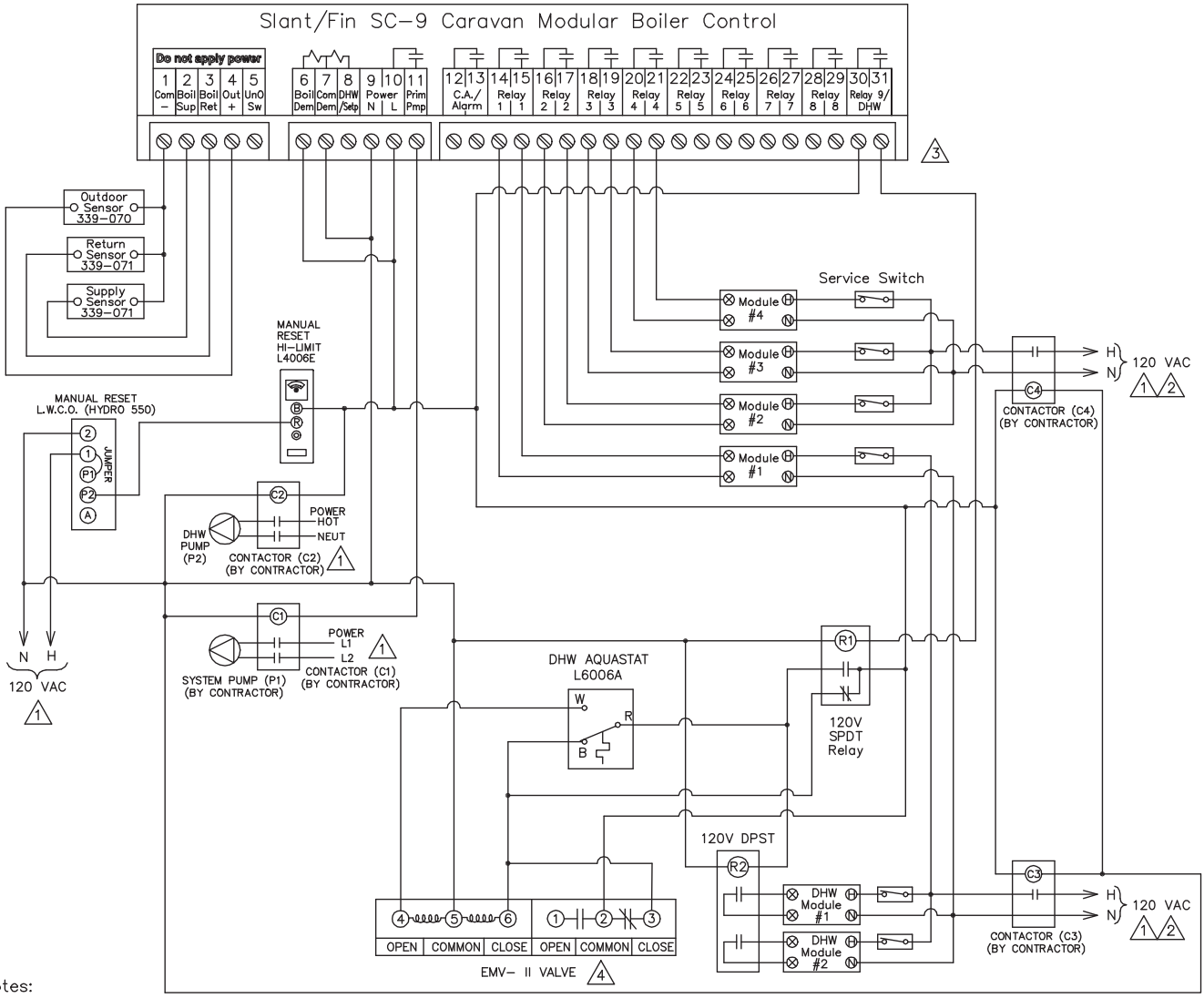

Notes:

1. Provide Disconnect Means and Overload Protection As Required by Local Code.
2. Single Pole Contactors Shown, Multiple Pole Contactor May be Used. Each Burner Is Rated @ 6 FLA, Size Contactor Accordingly.
3. Respective Dip Switch for Last On Must be put in Fixed Last Position.
4. Wiring of 1" through 2" EMV Valve Shown. If Wiring of a 2-1/2" EMV Valve is Required, Consult Factory.

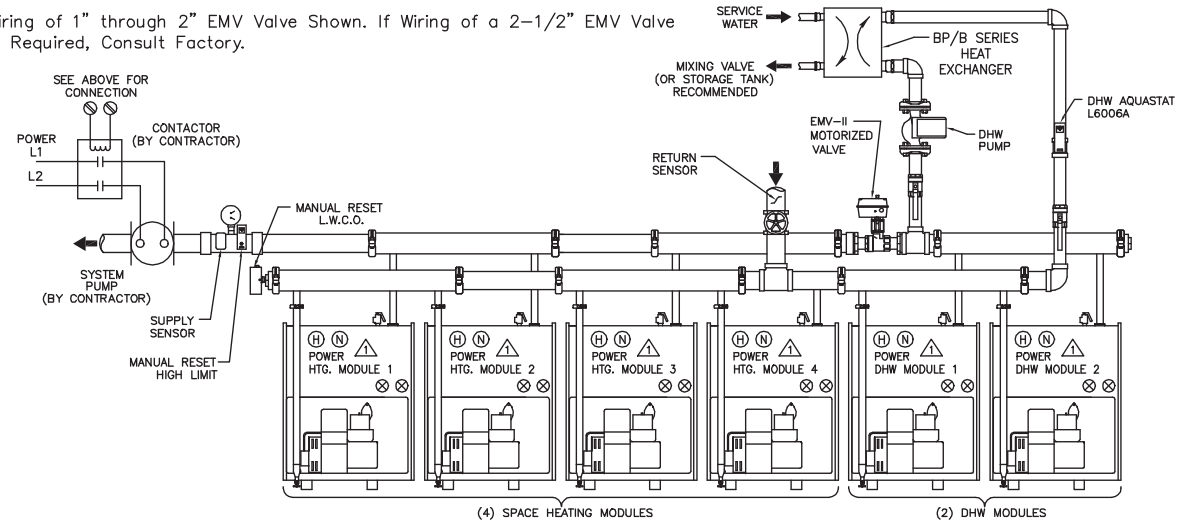

SC-9 SPACE AND DOMESTIC HOT WATER LADDER WIRING DIAGRAM

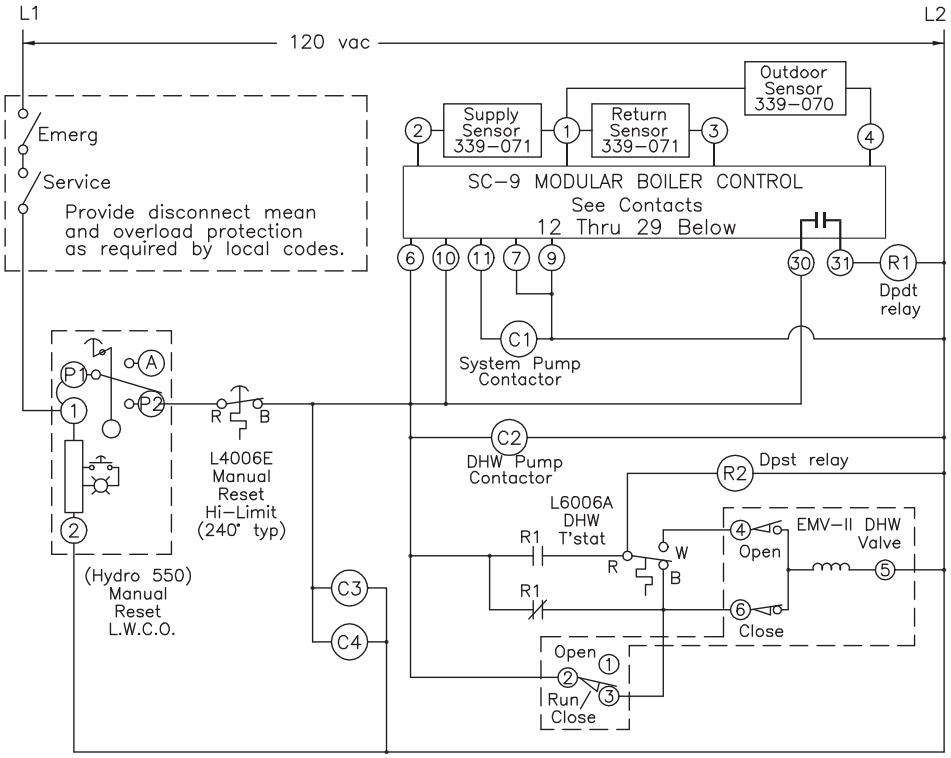

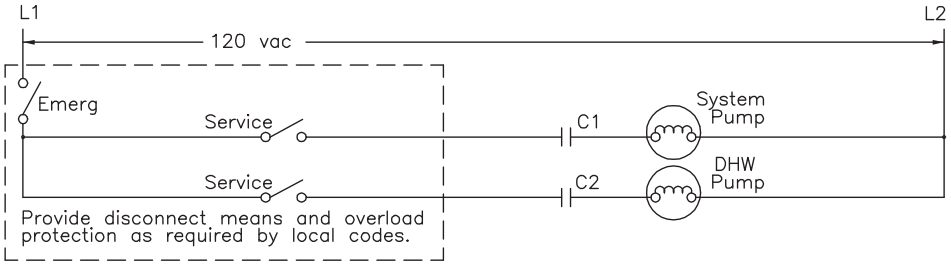

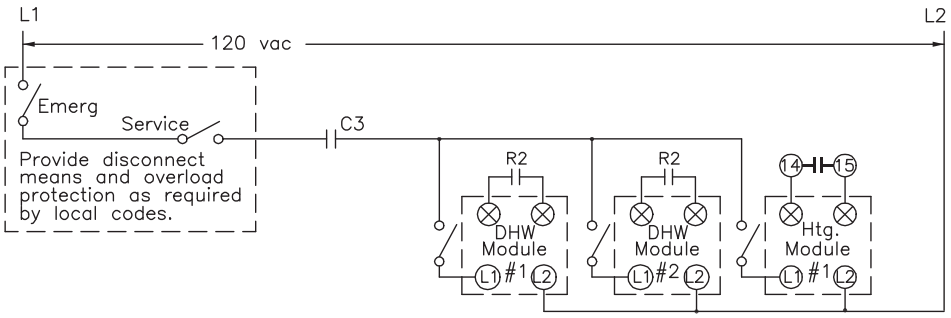

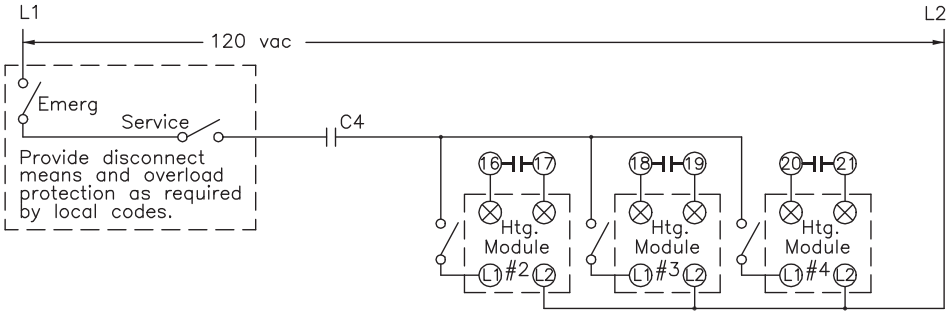

⊗ – SEE FIG. C1 FOR CONNECTION AT MODULE.

Slant/Fin®

BOILER WARRANTIES

Lifetime Limited Warranty
for Residential Cast-iron Hot Water Boilers in Household Use

Gas Models: Sentinel, Sentry, Galaxy and Victory

Oil Models: Intrepid, Liberty, Liberty II, XL-2000, EC Series

Electric Models: Monitron

FIRST-YEAR WARRANTY INCLUDES:
Repair or replacement for a period of one year after original installation of all parts found to be defectively manufactured.

LIFETIME LIMITED WARRANTY OF CAST-IRON SECTIONS is effective for as long as the boiler is owned by the original purchaser or for 25 years, whichever time period is longer. The warranty includes repair or replacement of cast iron sections found to be defectively manufactured, at a cost to consumer equal to the percentage indicated below of the manufacturer's then list price for the replacement parts:

Year of	Percentage paid by consumer (of list price at time of claim)	Year of	Percentage paid by consumer (of list price at time of claim)
2 thru 10	0%	18	40%
11	5%	19	45%
12	10%	20	50%
13	15%	21	55%
14	20%	22	60%
15	25%	23	65%
16	30%	24	70%
17	35%	25 & after	75%

This warranty extends only to boilers in household use.
See "Additional Warranty Terms" section for more details.

Limited Ten-Year Warranty
for Residential Application Cast-iron Steam Boilers

This warranty extends only to steam boilers and Jaguars in household use in buildings with one or two family dwelling units and which have been properly installed by a qualified heating contractor whose principal occupation is in the installation of heating equipment. Also, this warranty applies only to the first retail purchaser and only if the boiler has remained at all times in the location at which it was originally installed.

FIRST-YEAR LIMITED WARRANTY FOR RESIDENTIAL STEAM BOILERS:
Slant/Fin warrants its residential steam boilers to be free from defects in material and workmanship for one year from date of original installation. If any parts are found to be defective in material or workmanship, Slant/Fin will repair or replace the defective parts.

SECOND THROUGH TENTH YEAR LIMITED WARRANTY FOR CAST-IRON SECTION ASSEMBLY OF RESIDENTIAL STEAM BOILERS:
Slant/Fin warrants the cast-iron section assembly of its residential steam boilers to be free of defects in material and workmanship for the second through the tenth year following the date of original installation. If any sections are found to be defective during this period, Slant/Fin will repair or replace the section or, at its option, the entire heat exchanger.
See "Additional Warranty Terms" section for more details.

Limited Ten-Year Warranty
for Caravan Modular, Jaguar and Commercial Application of Individual Cast-Iron Boilers in Hot Water and Steam Heating Applications.

WARRANTY INCLUDES:
FIRST YEAR: Repair or replacement in accordance with warranty service procedure, for a period of one year after original installation, of all parts found to be defectively manufactured.

SECOND THROUGH TENTH YEAR: Repair or replace for the second through tenth year after original installation, of the cast iron or cast aluminum heat exchanger found to be defectively manufactured, at no cost for the replacement heat exchanger. Second through tenth year warranty is for the heat exchanger only.

This warranty extends only to boilers installed in closed loop space heating applications and domestic hot water applications. A properly sized heat exchanger must be used to heat the domestic water.
See "Additional Warranty Terms" section for more details.

CARAVAN SYSTEM RATING PLATE

System rating plate format for Caravan modular boiler system.
System rating plates are available upon request using the form on the back cover.

Slant/Fin® CORP. GREENVALE, NEW YORK 11548

CARAVAN
OIL FIRED CAST IRON BOILER SYSTEM
CARAVAN SYSTEM SERIAL NO.:

AHRI CERTIFIED® www.ahridirectory.org

CARAVAN MODEL NO.

CONSISTING OF MODEL BOILER MODULES
INDIVIDUAL BOILER MODULE SERIAL NUMBERS:

MODEL NO.	CARAVAN SYSTEM	INDIVIDUAL BOILER MODULE
I.B.R. BURNER CAPACITY LIGHT OIL GALS./HR.:		
I.B.R. GROSS OUTPUT BTU/HR.:		
D.O.E. CAPACITY BTU/HR.:		
NET I.B.R. WATER BTU/HR.:		
NET I.B.R. STEAM BTU/HR.:		
NET I.B.R. STEAM SQ. FT.:		

SAMPLE

CERTIFIED BY SLANT/FIN CORP.
MAXIMUM WORKING PRESSURE

SYSTEM	INDIVIDUAL BOILER MODULE
MAWP,WATER ____ PSI	MAWP,WATER ____ PSI
MAWP,STEAM ____ PSI	MAWP,STEAM ____ PSI
MAXIMUM WATER TEMP. ____ F	MAXIMUM WATER TEMP. ____ F
TOTAL SYSTEM MINIMUM RELIEF VALVE CAPACITY ____ LBS./HR.	MINIMUM RELIEF VALVE CAPACITY ____ LBS./HR.
SEE INDIVIDUAL BOILER MODULE CAPACITY	FOR INDIVIDUAL BOILER MODULES

43-0302.bmp

Notes:

Notes:

REQUEST FOR CARAVAN SYSTEM RATING PLATE

Each individual Caravan module is shipped with a rating plate bearing the model, serial number, capacities and certifications for that module. A modular boiler system is a single boiler. To meet local requirements, a system rating plate will be issued by Slant/Fin upon request. Just provide the information indicated on this page.

Slant/Fin Tech Service	FAX THIS REQUEST TO:	516-484-6958
	PHONE:	516-484-2600

Requested by: _____ **Phone:** _____
Required

Mail to: _____ **Phone:** _____
Required

NOTE:

INDICATE ACCURATELY
Some model numbers are similar, such as GGT-600 and GGT-600E etc.

PLEASE USE CARE TO MAKE SURE THE PROPER SYSTEM MODEL IS INDICATED COMPLETE WITH LETTER SUFFIX.

BE ACCURATE!
INCLUDE ALL LETTERS AND ZEROS, ENTER ALL INFORMATION ASKED FOR!

USE A SEPARATE FORM FOR EACH SYSTEM

Type of System:

- ☐ Gas
- ☐ Oil
- ☐ Water
- ☐ Steam
- ☐ Natural Gas
- ☐ Propane

INDICATE SYSTEM MODEL NUMBER BELOW:

_____

INDICATE SERIAL NUMBERS OF INDIVIDUAL MODULES (Please write legibly)

_____ _____
_____ _____
_____ _____
_____ _____
_____ _____

DO NOT WRITE BELOW THIS LINE
FOR SLANT/FIN USE ONLY

System serial number assigned _____ Done by _____

Since 1949 Slant/Fin® BOILERS & BASEBOARD
We Build Trust and Comfort

SLANT/FIN CORPORATION, Greenvale, N.Y. 11548 • Phone: (516) 484-2600
FAX: (516) 484-0933 • *Canada: Slant/Fin LTD/LTEE, Mississauga, Ontario*
www.slantfin.com